SECTION I
TABLE OF CONTENTS

1 GENERAL

2 SPECIFICATIONS
2.1 PUNCH UNITS
2.2 CONTROL UNIT

3 MECHANICAL CONSTRUCTION
3.1 PUNCH UNIT
3.2 CONTROL UNIT

4 PUNCH UNIT OPERATION
4.1 TAPE FEED
4.2 PUNCHING
4.3 TIMING

5 CONTROL UNIT OPERATION
5.1 PUNCHING CYCLE START
5.2 DATA INPUT
5.3 BLOCKING OF NEW START
5.4 TAPE FEED
5.5 PUNCH SOLENOIDS
5.6 PUNCHING CYCLE END
5.7 BLANK TYPE
5.8 MARK CHARACTER

6 SERVICE
6.1 GENERAL
6.2 TOOLS AND INSTRUMENTS
6.3 DISASSEMBLY
6.4 FITTING MAIN SHAFT 39
6.5 FITTING TAPE PATHWAY 25
6.6 PUNCH MECHANISM
6.6.1 Vertical and lateral punch mechanism adjustments
6.6.2 Adjusting the punch mechanism to the main shaft connecting rods and adjusting stop spring 44

6.6.3 Adjusting the solenoid assembly
6.6.4 Adjusting front and rear hammer springs 51 and 52
6.6.5 Fitting the front and rear beams 7 and 57 and adjusting hammer deflection
6.7 FITTING AND ADJUSTING FEED ARM 31 AND CONNECTING ROD SPRING 30
6.8 FITTING AND ADJUSTING TIMING PULSE TRANSMITTERS 32—37
6.9 FITTING AND ADJUSTING THE BRAKE PLATE 28
6.10 FITTING AND ADJUSTING THE SOLENOID HOUSING
6.11 FITTING THE LUBRICATION SYSTEM
6.12 FITTING THE MOTOR
6.13 CHECKING THE TAPE REEL HOLDER
6.14 TRIAL RUNS
6.15 ADJUSTING THE INTER-ROW SPACING
6.16 FAULT TRACING

7 SPECIAL PUNCH UNIT SERVICE
7.1 REPINNING THE FEED/BRAKE SOLENOID FRAME 15
7.2 FITTING FEED ROCKER 17

8 CONTROL UNIT SERVICE

1 ## GENERAL

This service manual describes the Facit 4060 and Facit 4061 punch units. Applicable sections of the manual also describe the Facit 4063 punch unit. Control unit 5104 is described in conjunction with the punch unit descriptions. Punch-unit/control-unit interaction is also described.

The Facit 5104 control unit has superseded the Facit PE 1507, 1508 and 1509 control units. This manual describes the 5104; it applies to the superseded units only to a very limited extent.

The Facit 5104 control unit is reconnectable for 115, 220 and 240 V mains voltages via power transformer taps. The nameplate specifies the voltage for which the unit was wired at the factory. The output voltage to the punch unit is always 220 V, regardless of the mains voltage input.

The circuit boards in the Facit 5104 can be used in the PE 1507, 1508 and 1509 without modification. Punch unit connections (both signals and connectors) are identical for the 5104 and the PE 1507, 1508 and 1509.

Punch units:

Designation	Mains voltage	Mains frequency	Number of tracks
4060 (PE 1501)	220 V	50 Hz	5-8 (standard)
4060 (PE 1502)	220 V	60 Hz	5-8 (standard)
4060 (PE 1503)	115 V	50 Hz	5-8 (standard)
4060 (PE 1504)	115 V	60 Hz	5-8 (standard)
4061 (PE 1511)	220 V	50 Hz	6 (typesetting)
4061 (PE 1512)	220 V	60 Hz	6 (typesetting)
4061 (PE 1513)	115 V	60 Hz	6 (typesetting)

Control units:

Designation	Mains voltage	Mains frequency	Number of tracks
5104 (PE 1507)	220 V	50-60 Hz	5-8
5104 (PE 1508)	115 V	50-60 Hz	5-8
5104 (PE 1509)	240 V	50-60 Hz	5-8

Punch units and control units can be combined as follows:

Punch unit	Control unit
4060, 220 V, 50 Hz	5104
4061, 220 V, 50 Hz	5104
4060, 220 V, 60 Hz	5104
4061, 220 V, 60 Hz	5104
4060, 115 V, 50 Hz	None
4060, 115 V, 60 Hz	None

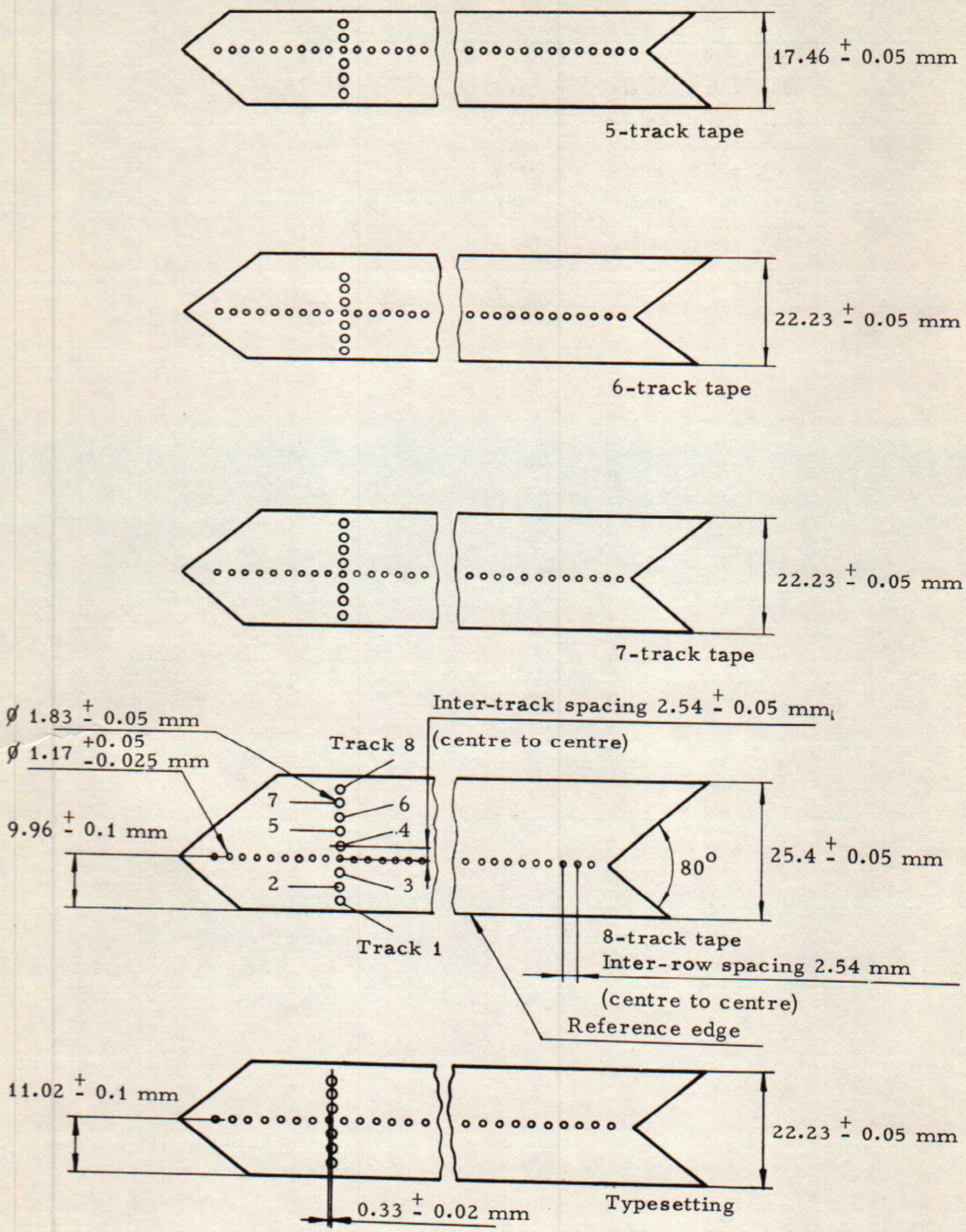

Fig. 2-1 Tape dimensions and hole configuration

2 SPECIFICATIONS

2.1 PUNCH UNITS

Punch speed:	150 rows per second at nominal voltage and frequency
Row spacing:	2.54 mm (0.1")
Tape feed:	Incremental, externally controlled
Feed accuracy:	Complies with ISO standard Adjacent rows, 3% 10 rows, 1% 50 rows, 0.5%
Punch hole configuration:	5-8 track ISO standard 6-track typesetting
Tape widths:	5-track 17.46 $\pm$ 0.05 mm (.687" $\pm$ .002") 6-track 22.23 $\pm$ 0.05 mm (.875" $\pm$ .002") 7-track 22.23 $\pm$ 0.05 mm (.875" $\pm$ .002") 8-track 25.4 $\pm$ 0.05 mm (1.000" $\pm$ .002")
Tape thickness:	Punch is adjusted for 0.1 mm tape on delivery, but can be reset for tapes ranging from 0.08 mm to approx. 0.12 mm in thickness
Type of tape:	Paper, mylar or plastic tape complying with ISO standard
Tape reel hub:	Accepts 51 - 52 mm (2") cores
Outside diameter of tape reel:	Up to 200 mm (8")
Dimensions:	Length 516 mm (20.4") Width 210 mm (8.3") Height 218 mm (8.6")
Weight:	10 kg (22 lbs)
Mains connection:	Mains voltage shall not be connected up to punch units - control units supply the punch units with voltage (see section 1)

Voltage:

Facit 4060

220 V ± 10% single phase 50 Hz ± 2 Hz
220 V ± 10% single phase 60 Hz ± 2 Hz
115 V ± 10% single phase 50 Hz ± 2 Hz
115 V ± 10% single phase 60 Hz ± 2 Hz

Facit 4061

220 V ± 10% single phase 50 Hz ± 2 Hz
220 V ± 10% single phase 60 Hz ± 2 Hz
115 V ± 10% single phase 50 Hz ± 2 Hz

Power consumption: Approx. 90 W

2.2 CONTROL UNIT

Dimensions: Length 522 mm (20.5")
Width 262 mm (10.1")
Height 180 mm (7.1")

Weight: 15 kg (33 lb)

Mains connection: 220 V ± 10% single phase 50-60 Hz ± 2 Hz
115 V ± 10% single phase 50-60 Hz ± 2 Hz
240 V ± 10% single phase 50-60 Hz ± 2 Hz

Power consumption: Approx. 100 W

Start pulse: Negative 0.1 - 3 ms
Logical 0, high level, minimum +1 V, maximum +25 V
Logical 1, low level, minimum -4 V, maximum -25 V
Maximum rise time 10 µs
Input impedance 5 kilohms

Data signal: 5, 6, 7 or 8 parallel lines
DC or negative pulse with minimum duration 0.1 ms arriving simultaneously with start pulse
Logical 0, high level, minimum +1 V, maximum +25 V
Logical 1, low level, minimum -4 V, maximum -25 V
Input impedance 5 kilohms

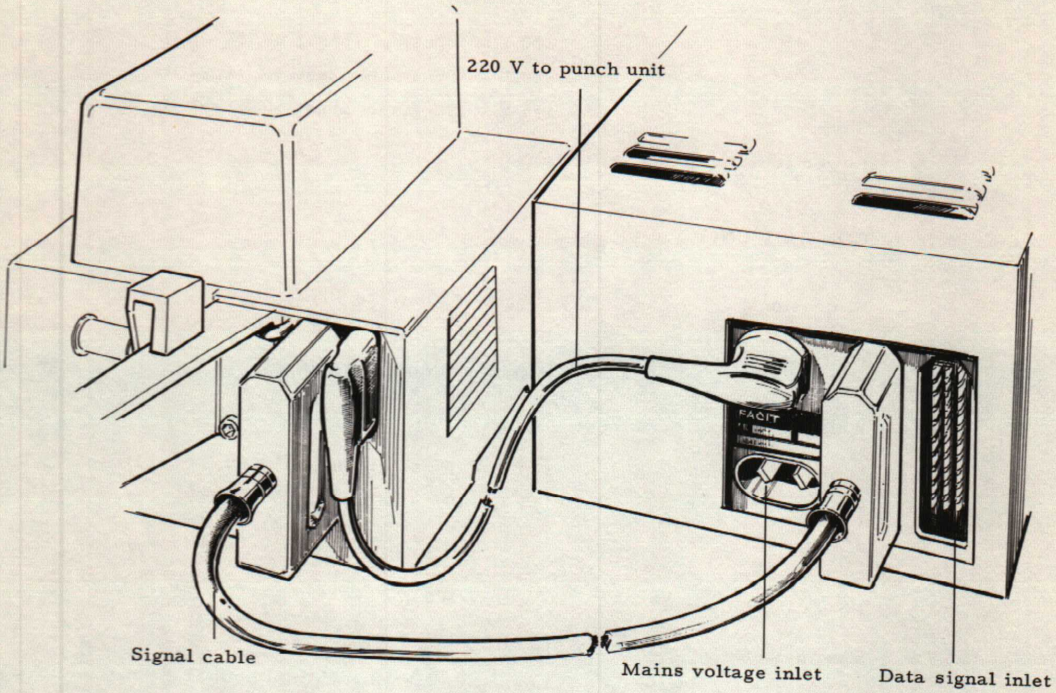

Fig. 2-2 Punch-unit/control-unit interconnection

Ready signal:	Punch ready for data input Level, -10 V nominal Source impedance, 570 ohms nominal Switching time, max. 10 µs Punch not ready for data input Level, +1 V nominal (max. 10 mA) Source impedance 100 ohms nominal Switching time, max. 10 µs
Buffer register:	Built-in, stores one character

Internally programmed functions

Blank tape:	Lever on punch unit can be used to feed out tape punched only with feed hole
Mark character:	Same lever can be used to feed out tape punched with a special mark character which can comprise any combination of holes specified by the customer

Connections and controls

The punch unit is connected to the control unit via a signal cable and power cable (see Fig. 2-2). The control unit shall be connected to mains having the voltage specified on its nameplate.

ON/OFF power switch:	This control unit switch turns on power throughout the system and lights an indicator lamp on the control unit
Line fuse:	3A time delay fuse is used in all control units
Track selector:	Four-position selector switch determines punching mode Position 5 -- tracks 1 - 5 only Position 6 -- tracks 1 - 6 only Position 7 -- tracks 1 - 7 only Position 8 -- tracks 1 - 8

For further information see the Instruction Book for the FACIT 4060 (Order No. 82. 02. 06).

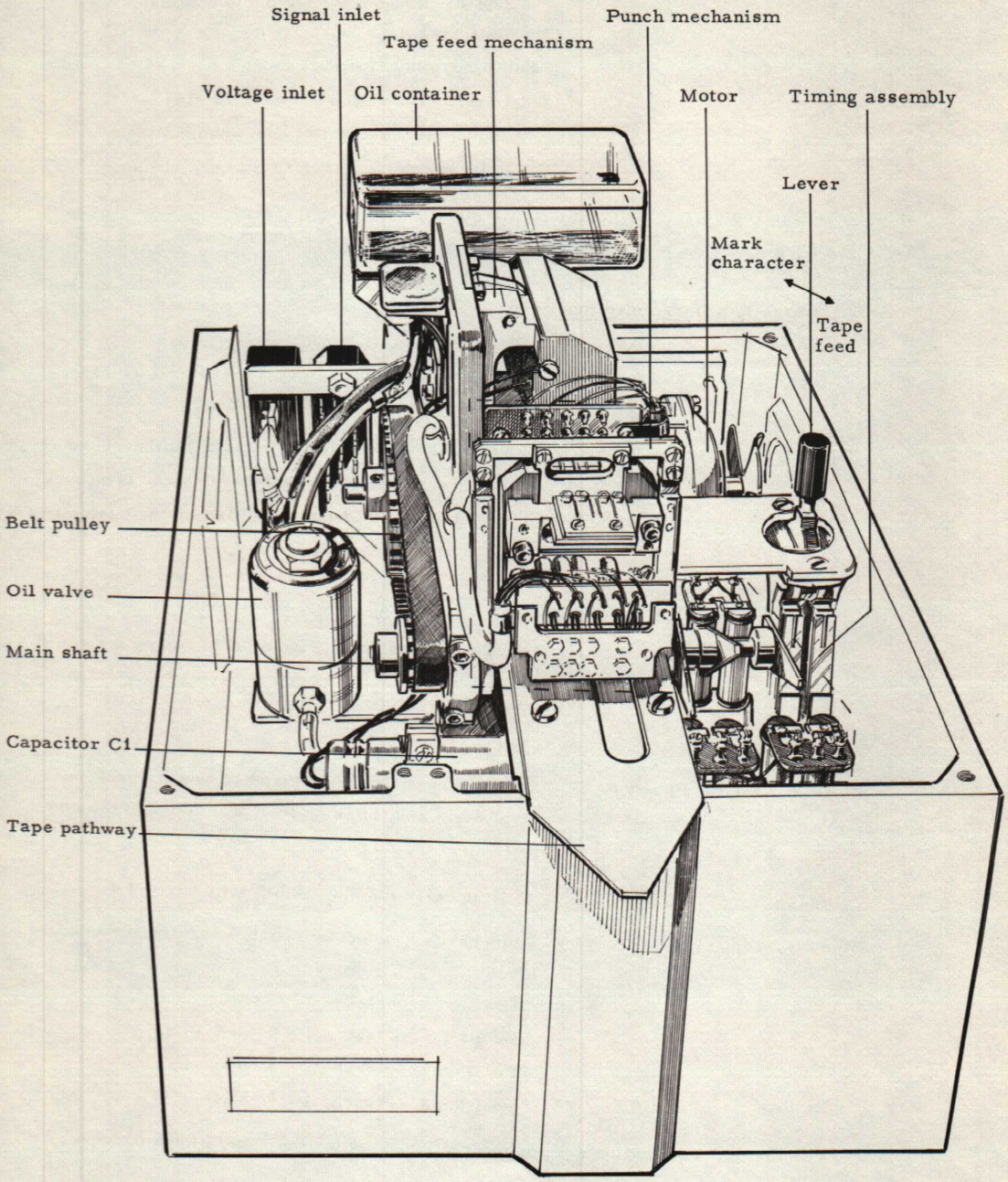

Fig. 3-1 Interior of punch unit

3 MECHANICAL CONSTRUCTION

3.1 PUNCH UNIT

The punch unit is mounted on a cast chassis and housed in a cast enclosure. At rear is the holder for the tape reel and the inlets for power cable and signal cable. A cover at top protects the punch mechanism.

Fig. 3-1 shows the interior of the punch unit. At rear is the oil container that is connected to the gravity feed lubrication system. At left is the oil shut-off valve which also distributes oil to three lubrication points (see Appendix 1, numbers 3, 9 and 12). Also visible is the belt pulley and the main shaft which drives the punch mechanism. At centre are the tape pathway, guillotine and tape feed mechanism. At right are the three timing pulse transmitters that synchronize punch-unit and control-unit operation.

The power cable connector is of standard Swedish type without ground terminal. The signal cable connnector comprises a 30-pin connector.

Signal cable connector layout (3P1)

Pin No.	Signal	Pin No.	Signal	Pin No.	Signal
a1	G-start	b1	Blank tape	c1	Track 1
a2	G-stop	b2	Mark char.	c2	" 2
a3	G-ready	b3	-	c3	" 3
a4	Ground	b4	-	c4	" 4
a5	-17 V	b5	-	c5	" 5
a6	-16 V	b6	-	c6	" 6
a7	Feed	b7	-	c7	" 7
a8	Brake	b8	-	c8	" 8
a9	-	b9	-	c9	-
a0	-	b0	-	c0	-

3.2 CONTROL UNIT

The control unit contains the electronic circuitry that controls the punch unit, the electronic circuitry for the buffer register and the power supply.

The control circuitry and buffer register are built on seven printed circuit boards occupying the forward section of the control unit.

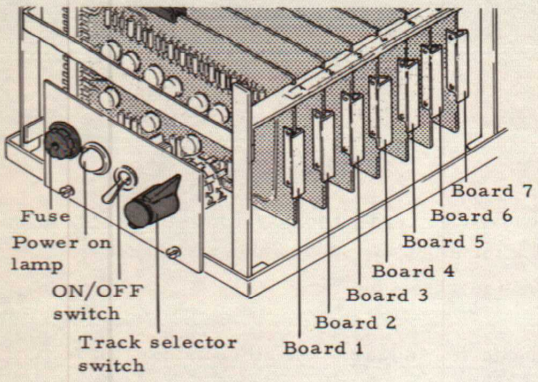

Fig. 3-2 Forward section of control unit

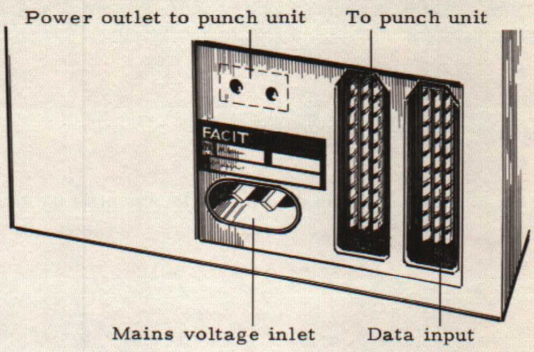

Fig. 3-4 Rear panel of control unit

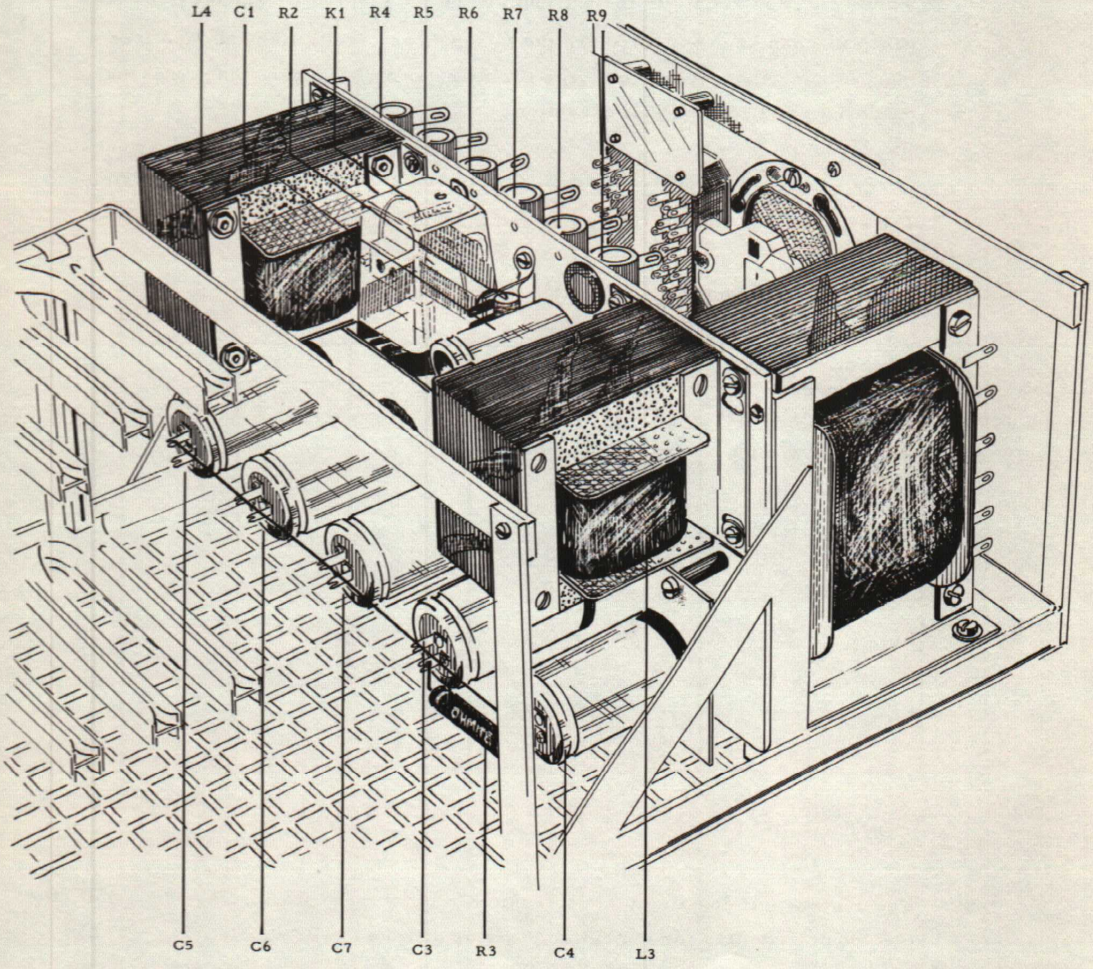

Fig. 3-3 Power supply

The seven boards contain:

Boards 1 and 2 - Eight register flip-flops with input gates
Boards 3 and 4 - Amplifiers with gates for punch solenoids
Board 5 - Start and stop circuits
Board 6 - Synchronizing circuits
Board 7 - Amplifiers for feed and brake solenoids

The front panel, see Fig. 3-2, contains the ON/OFF power switch, the indicator lamp for mains voltage, the fuse and the track selector switch.

The power supply occupies the rear section of the control unit. Primary winding on the transformer is tapped for 115, 220 and 240 V. The mains voltage outlet for the punch unit is connected across the 220 V winding. The punch unit is thus supplied with 220 V regardless of whether the mains voltage is 115, 220 or 240 V. The punch solenoids are supplied with -17 V; the feed solenoid and brake solenoid take -16 V. The rest of the circuitry takes -10 and +10 V.

The rear panel, Fig. 3-4, contains the mains voltage inlet, the punch unit power outlet, the connector for the signal cable to the punch unit and the data input connector.

Data input connector (3P2) layout

Pin No.	Signal	Pin No.	Signal	Pin No.	Signal
a1	Start pulse	b1	-	c1	Track 1
a2	Ready signal	b2	-	c2	" 2
a3	Ground	b3	-	c3	" 3
a4	-	b4	-	c4	" 4
a5	-	b5	-	c5	" 5
a6	-	b6	-	c6	" 6
a7	-	b7	-	c7	" 7
a8	-	b8	-	c8	" 8
a9	-	b9	-	c9	-
a0	-10 V	b0	+1 V	c0	+10 V

Punch unit connector (3P1) layout

Same as signal cable connector layout. See section 3.1.

4 PUNCH UNIT OPERATION

Unless otherwise stated, numerical references appearing in the following sections refer to Appendix 1. Alphabetical references refer to illustrations on the facing page (or nearby page). The punch unit circuitry is shown in Appendix 2.

4.1 TAPE FEED

The motor provides tape feed power via main shaft 39. Connecting rod 45, mounted eccentrically on the main shaft, is connected to feed arm 31 by means of spring 30 and adjusting screw 29. The feed arm is attached to the chassis via another spring 38. The tape runs between the feed arm and brake plate 28 that is mounted on the feed arm. If the adjusting screw is set correctly, the connecting rod causes the top of the feed arm to move the tape 2.54 mm (0.1") which is the inter-row spacing.

Tape feed occurs when feed rocker 17 is actuated by feed solenoid 14. This causes feed screw 13 on feed rocker 17 to press down lug 27 on spring 26 against brake plate 28 on the feed arm, thus pinching the tape between feed arm and brake plate. When the feed arm moves forward, the pinched tape must follow. When forward motion is completed, current to the feed solenoid is interrupted. At the same instant, brake solenoid 16 is energized and the feed rocker is actuated. The feed rocker rotates swiftly on its bearing 18 and presses down the brake plate 24 which pinches the tape against the tape pathway 25. Current flows through solenoid 16 while the tape is stationary.

When the next feed cycle commences, current to solenoid 16 is interrupted and current flows again to solenoid 14. Operations continue as shown on Figs. 4-1 and 4-2. Current is switched from solenoid to solenoid (thereby actuating the feed rocker) at points a and c in Figs. 4-1 and 4-2.

4.2 PUNCHING

The motor provides punching power via main shaft 39. Two connecting rods 40 mounted eccentrically on the main shaft share a common crossarm 4 joined to them by two connecting rod springs 1, one attached to each rod. The punch pins 42 are carried on a guillotine 5 that is screwed to the crossarm. Vertical guillotine motion in a groove in the guillotine frame 2 is imparted by the eccentric connecting rod bearings. A front beam 57 and rear beam 7 located on each side of the guillotine frame are attached to it with two screws 55.

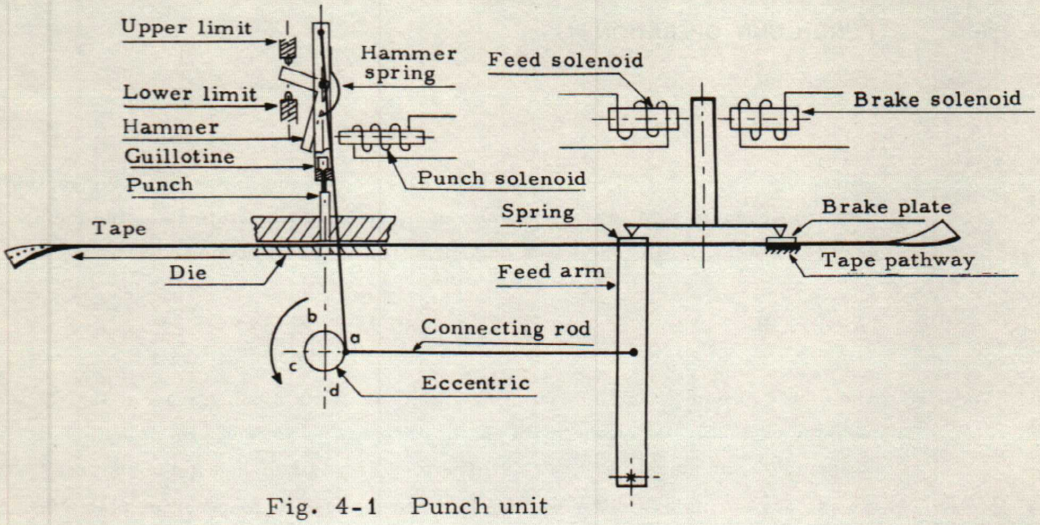

Fig. 4-1 Punch unit

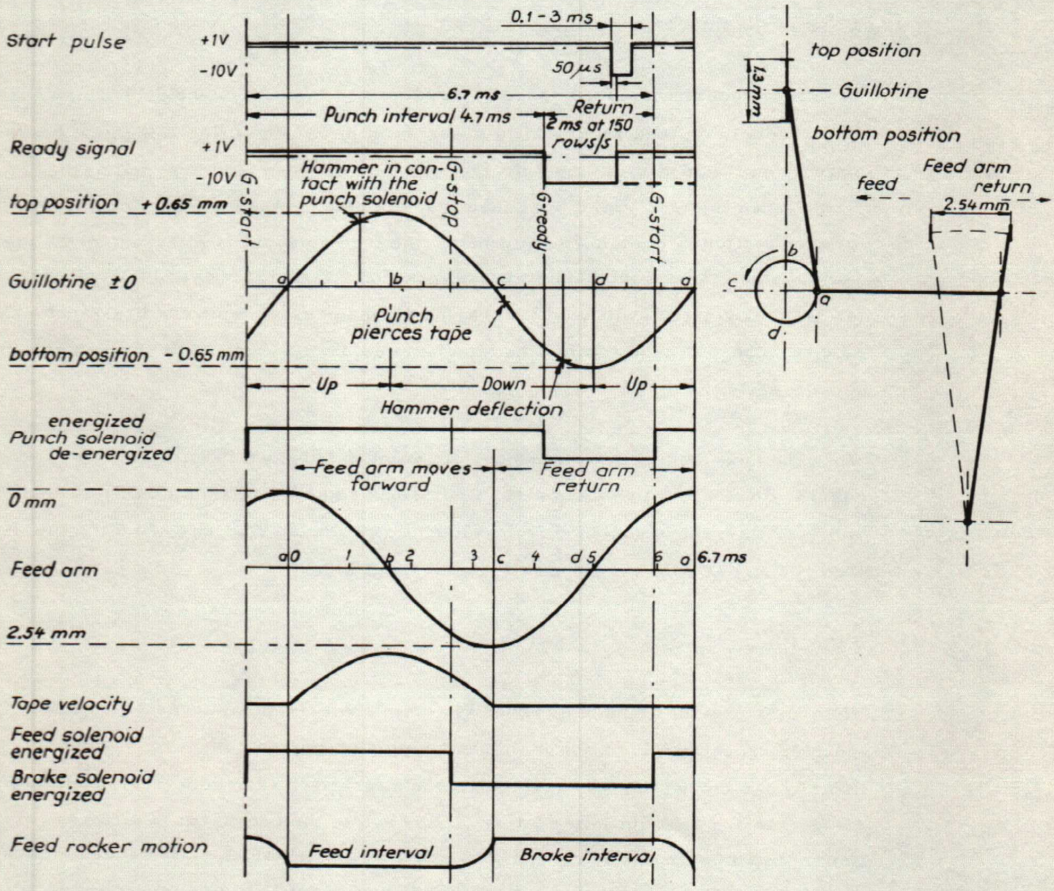

Fig. 4-2 Punching cycle

Four upper limit screws 58 and four lower limit screws 6 are mounted in each beam. Hammers 54 for punch pins 42 are located so that their shanks are positioned between an upper and a lower limit screw. Four hammer springs 51 and 52 are mounted on each side of the guillotine. Each of the eight springs is in contact with the rear side of each hammer. The eight hammers rotate on a common shaft 8. Hammer shanks are turned to the front and to the rear alternately. Eight punch pins are suspended in the lower guillotine crossarm - one for each hammer. There is also a fixed punch pin for the feed hole. Three punch pins are located on one side of the feed hole and five on the other. Two paired grooves have been milled in each punch pin, one pair at the top where punch pins are suspended in the guillotine, and one pair at the bottom. A stop spring 44 in the lower grooves prevents the punch pins from lifting too high when the guillotine moves toward its top position.

Figs. 4-1 and 4-2 are schematic drawings which show the punch operation and punching cycle. The start pulse and ready signal appearing at top of Fig. 4-2 are synchronization signals described in section 5. Timing signals G-start, G-stop and G-ready are described in section 4.3. Just before the guillotine is at its top position with the eccentric in position b, the hammer shanks contact the upper limit screws, thus forcing the hammers into position above the punch pins. If no hole is to be punched, the hammer spring concerned swings the hammer to the side of the punch pin as the guillotine moves downward to eccentric positions c and d.

If a hole is to be punched, the punch solenoids concerned, both upper 10 and lower 11, are energized while the main shaft rotates from a to d (Figs. 4-1 and 4-2). All the hammers are positioned above the punch pins by the upper limit screws which contact the hammer shanks as the guillotine passes through its top position. Those hammers which are to punch holes are drawn to their respective punch solenoids. The punch solenoids now counteract the respective hammer springs, which are thus unable to move the hammers to the side of the punch pins. As the guillotine moves downward, hammers which are attracted to their punch solenoids press their punch pins through the tape, which is now stationary on die 41. Just before the guillotine reaches its bottom position d, all the hammer shanks contact their respective lower limit screws, which force the hammers to the side of the punch pins. When the guillotine moves upward it engages the punch pin heads, lifting the punch pins from the die.

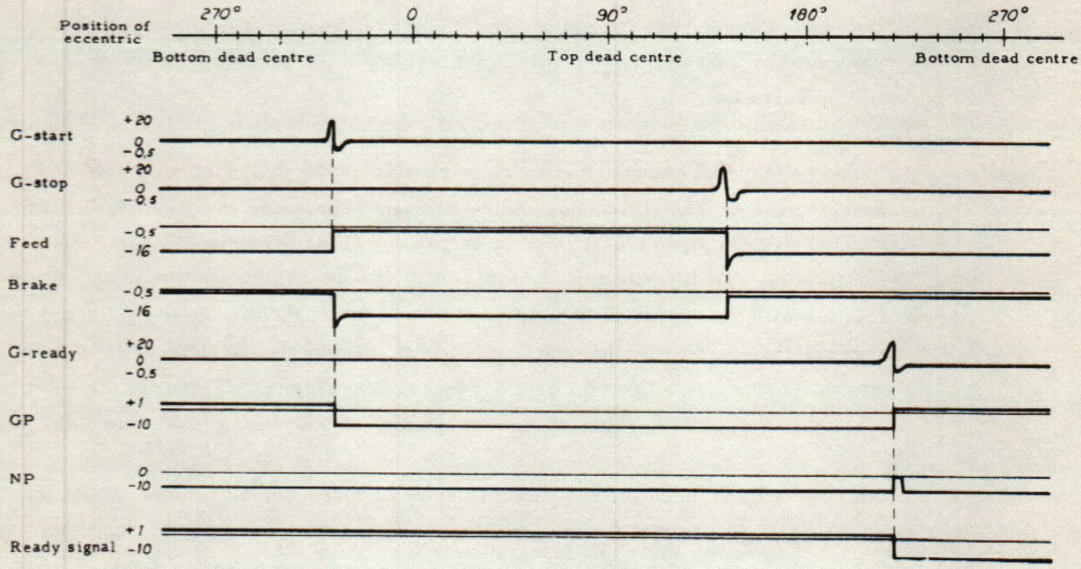

Fig. 4-3 Diagram of timing pulses

4. 3 TIMING

Synchronization between the control unit and punch unit is initiated by three timing pulse transmitters actuated by main shaft 39. Each timing pulse transmitter comprises an arm 32, 33 and 34 attached to the main shaft and a pair of coils 35, 36 and 37. The coils have premagnetized cores separated by an air gap at the top. The arm on the main shaft passes the air gap once per revolution to provide the timing pulse.

Thus the three timing pulse transmitters each send a signal to the control unit. The following signals are sent at the three main-shaft angles shown in Fig. 4-3.

- G-start, 37 and 34, indicates the instant to start feed.
- G-stop, 35 and 33, indicates the instant that feed is complete.
- G-ready, 36 and 32 indicates the instant when punching is complete and the punch is ready to receive information for a new row.

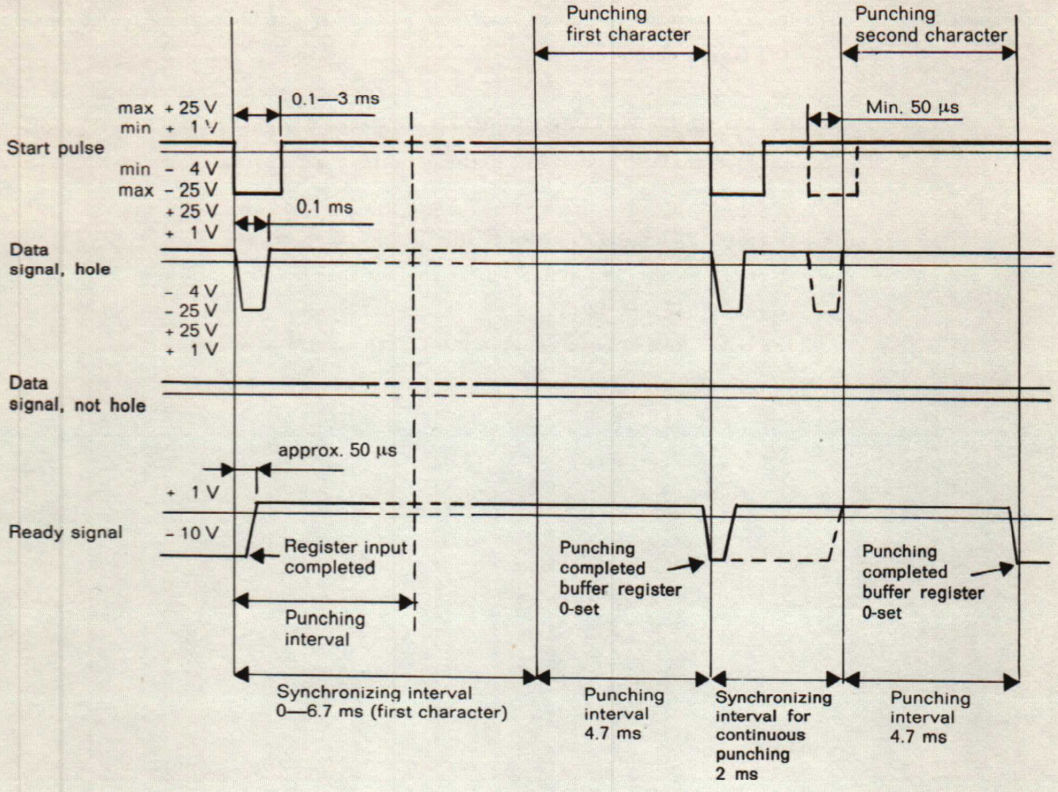

Fig. 5-1 Diagram of input and output signals. (The time intervals refer to maximum speed 150 characters per second.)

5 CONTROL UNIT OPERATION

Punch unit operation is controlled by the control unit. Appendix 3 shows the control logic to which direct reference is made in the following text.

The punching cycle is initiated by an incoming start pulse. Simultaneously with the start pulse, information to be punched (one row) is fed to the buffer register (boards 1 and 2). This information is transmitted to the punch solenoids after synchronization by the three timing pulse transmitters G-start, G-stop and G-ready. The ready signal is sent out from the control unit when the punching cycle reaches the point at which the punch is ready to receive new information. The start pulse, data signals and ready signal are illustrated in Fig. 5-1. Fig. 4-2 shows the signals together with guillotine and feed arm motion and current flow through feed and brake solenoids.

5.1 PUNCHING CYCLE START

A start pulse (Fig. 5-1 and Appendix 3) is used to start the punching cycle. The motor is started and reaches full speed in approx. 0.4 sec. During this interval the punch is blocked. After punching is complete, the motor runs at full speed an additional 2-3 sec. If a new start pulse is received during this interval, punching will resume within an interval of 6.7 milliseconds maximum. After one row has been punched the ready signal is generated.

5.2 DATA INPUT

Data is fed to the punch on 5, 6, 7 or 8 parallel lines simultaneously with the start pulse, either as DC voltages - a high level for not hole (logical 0) and a low level for hole (logical 1) - or as negative pulses on lines which are to actuate the punching. The leading edge of the start pulse triggers a 50 μs pulse which permits signals to enter the buffer register via the data lines. Information must be available during this full period. Information is then held in the buffer register until punching is completed. Appendix 4 shows that register positions 6, 7 and 8 can be held at the 0-state by the track selector.

5.3 BLOCKING OF NEW START

The trailing edge of the IP pulse 1-sets ready-signal flip-flop V7 and V8. See Appendix 6. As a result the high level is sent out on the ready-signal line, thus indicating that punching is in progress and that neither start pulse nor data signals are any longer required. A new start pulse cannot be received while the ready-signal line is at the high level and must not be sent to the punch during this interval.

Internally, the ready signal is used to start the delay network V11-V16, which activates a relay that in turn supplies voltage to the motor. This network has a time constant of 2-3 seconds and during this interval the motor is kept running. Every new ready signal, i. e. when the ready signal flip-flop is one-set, resets this network to its original condition, so that the motor is kept running for 2-3 seconds after the last ready signal.

The high level of the ready signal can be used externally to prevent a new start from being sent to the unit before it is ready to receive new data (i. e. after the ready signal becomes negative again).

5.4 TAPE FEED

The punching cycle cannot be permitted to start before the motor comes up to full speed which normally requires 0. 4-0. 6 seconds. The delay is generated by the monostable multivibrator V2 and V3 (see Appendix 7). It is 1-set for 0. 4-0. 6 seconds, during which the start of the punching cycle is blocked. A delay circuit, R13, R14 and C6, prevents the start of the punching cycle before the 1-setting of flip-flop V2-V3, i. e. before this flip-flop causes blocking. This delay is indicated in Appendix 3 by the integrating circuit. After the blocking interval, feed starts when the next synchronizing pulse G-start (from the punch unit) 1-sets the feed flip-flop V7 and V8. This flip-flop energizes the feed solenoid via the power amplifier shown in Appendix 8.

Transistor V17 (Appendix 6) provides a signal which directly resets all flip-flops to the 0 state when the mains voltage is turned on.

5.5 PUNCH SOLENOIDS

The signal to the feed solenoid 1-sets the GP flip-flop (V10, V11 on Appendix 7), which in turn gates out information from the buffer register to the punch solenoids. Punch solenoids corresponding to tracks where punching is to take place are energized. The amplifiers which drive the punch solenoids are shown in Appendix 5.

5.6 PUNCHING CYCLE END

When the feed is complete, i. e. after the main shaft has completed half a revolution, current to the feed solenoid is interrupted by the G-stop signal when it 0-sets the feed flip-flop. The 0-setting of the feed flip-flop also sends current through the brake solenoid. However, the GP flip-flop remains in the 1-state until punching is fully completed, whereuponthe G-ready signal 0-sets it. The differentiated trailing edge of the GP pulse, called NP, 0-sets the register and ready-signal flip-flops. The low level is fed out on the ready-signal line, indicating that the punching cycle is complete.

5.7 BLANK TAPE

When the lever is set in the feed direction (blank tape line, see Appendix 2) the delay networks for motor start and stop are actuated (see Appendices 4 and 6). The G-start pulse initiates feed as usual. When the GP flip-flop is 1-set the gates admitting information to the punch solenoids open. In this case all data flip-flops are zero-set (no IP pulse generated) and as a result only the feed hole is punched. Blank tape is fed out as long as the lever is in the feed direction. The ready-signal line is at the low level (ready signal generated) during this operation.

5.8 MARK CHARACTER

A customer-selected mark character can be punched when the lever is set opposite to the feed direction. The buffer register stages for the mark-character tracks to be punched are 1-set. Feed and punching are started in the same manner as described in section 5.7.

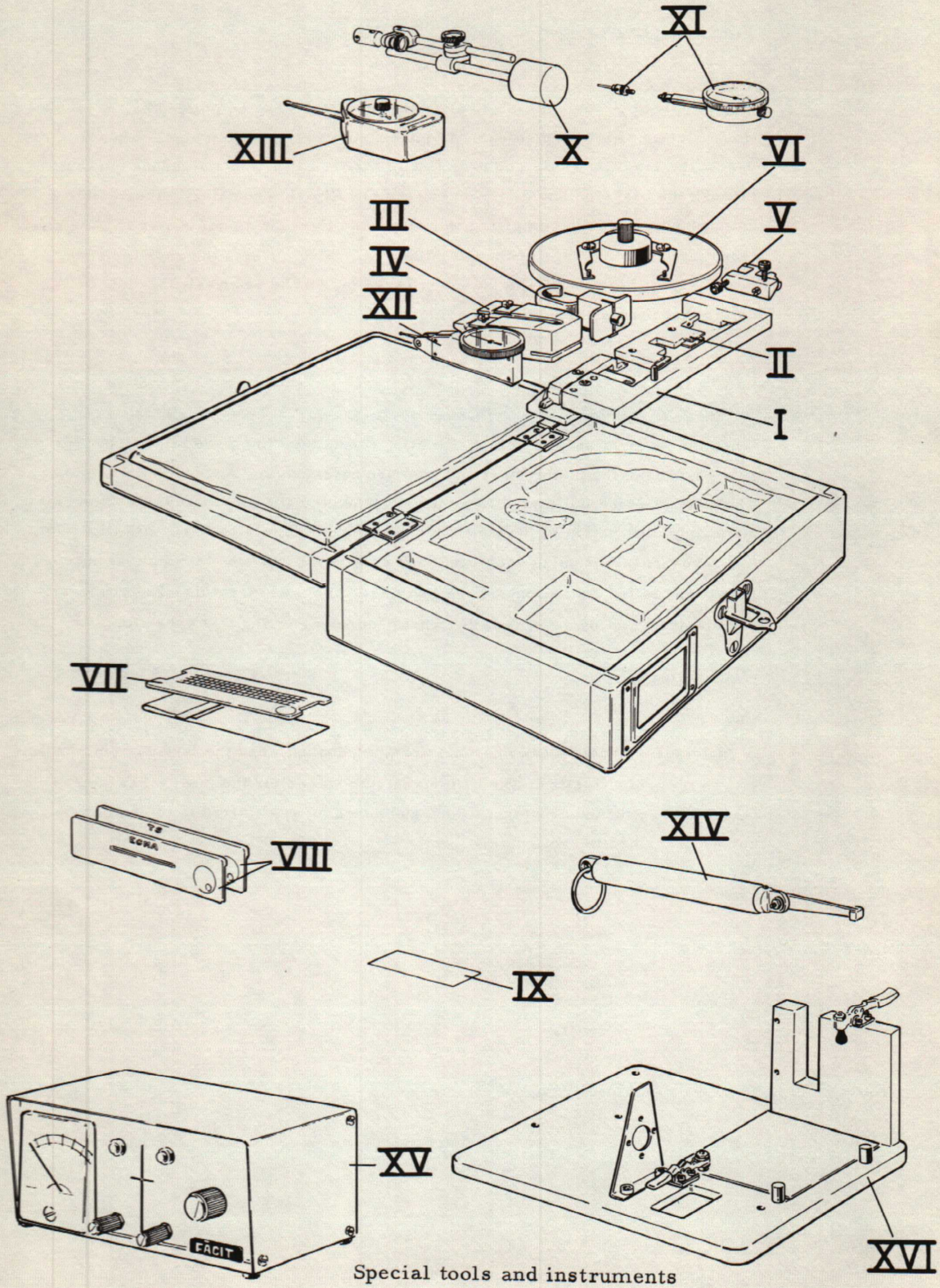

Special tools and instruments

6 SERVICE

6.1 GENERAL

The instructions presented here comprise complete documentation for service carried out at central workshops by personnel trained by the FACIT service organization. The servicing of the punch unit requires the availability of special tools - in their absence, the servicing job should not be undertaken. Servicing work more complicated than that herewith described should not be undertaken without entering into an agreement with the FACIT service organization.

Instructions for mechanical assembly and adjustment are arranged in the natural punch-unit assembly sequence. Each section comprises a complete set of instructions for the adjustment in question, but the extent of disassembly is not specified. All numerical references used throughout the text refer directly to Appendix 1. Alphabetical references, on the other hand, refer to the adjacent illustrations. Special tools are designated using Roman numerals.

App. 1

6.2 TOOLS AND INSTRUMENTS

Special tools

Reference No.	Order No.	Description
I	11.58601.00.9	Special tool for adjusting punch mechanism to the tape pathway
II	11.58601.01.9	Special tool for adjusting tape pathway (used together with special tool I)
III	11.3.100900.9	Special tool for securing main shaft in arbitrary position
IV	11.58602.00.9	Holder for DTI (used to adjust feed arm)
V	11.58605.00.9	Holder/index (holds DTI and indexes tool XI)
VI	11.58603.00.9	Protractor wheel for adjusting timing arms (used together with holder V)
VII	11.44005.00.4	Template for inter-row spacing
VIII	15.02769.00.4 15.02770.00.4	Templates for checking lateral track positioning (one for ECMA standard and one for typesetting tapes).
IX	11.58607.00.0	Feeler gauge for feed arm brake plate
X	11.58608.00.0	Magnetic holder for dial gauge XI
XV	11.58609.00.0	Test box for magnetizing and checking timing transmitters, punch solenoid check and speed control
XVI	11.58604.00.9	Test rig for running and adjusting punch unit

Measuring instruments

Reference No.	Order No.	Description
XI	11.58619.00.0	Dial gauge with 1.5 x 10 mm stylus (Compac 341)
XII	11.58620.00.0	DTI -- dial tilt indicator (Tesa Test)
XIII	11.58621.00.0	Dial-type spring tension gauge, 100-350 g (Haldex AB)
XIV	11.58622.00.0	Tubular spring tension gauge, 0-1000 g

Hand tools

Soldering iron
Diagonal cutting pliers
Long-nose pliers
Tweezers
Screwdrivers -- 3, 4 and 5, 5 mm
Socket wrench, 5 mm
Hex-key wrenches -- 1.5, 2.5, 3 and 4 mm
Two open-end hex wrenches (6 mm)
Screwdriver combined with socket wrench
Scraper
Whetstone (Norton Abrasives)
Feeler gauge, 8 blades ranging from 0.05 to 0.5 mm, 80 mm long
Parallel-jaw clamp, max. opening 25 mm
Tape pathway cleaner
Loctite C

Note: Tool set, complete (No. 11.58633.00.0) includes special tools, measuring instruments and hand tools.

6.3 DISSASEMBLY

- Remove punch unit from its enclosure prior to disassembly.
- The toothed belt, the belt pulley on the motor shaft and the drive motor must be removed before the feed arm 31 can be removed.

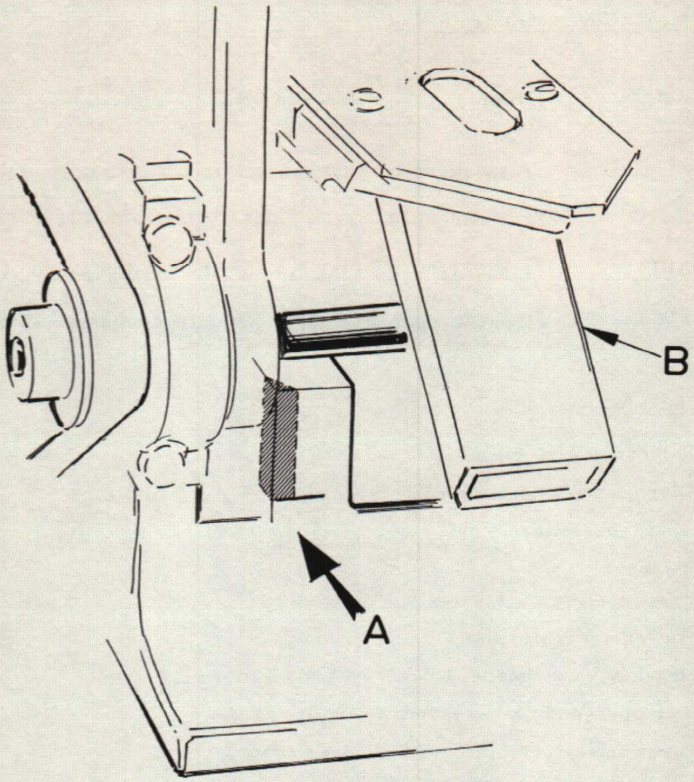

Fig. 6–1

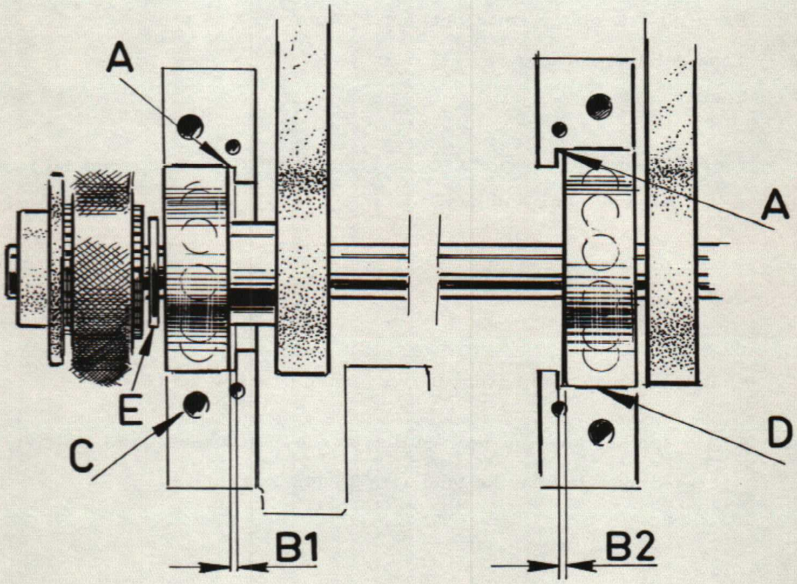

Fig. 6–2

- The punch mechanism, the tape pathway 25 and the main shaft 39 shall be removed in the listed sequence.

- On certain punch units the main shaft can be removed without removing the punch mechanism and tape pathway. The drive motor must be removed on all punch units in order to remove spring 30 from the feed arm.

6.4 FITTING MAIN SHAFT 39

The bearings in the chassis that carry the main shaft and the bearings that carry eccentrically mounted connecting rod 40 (for the punch mechanism) and connecting rod 45(for the feed arm)are exposed momentarily to heavy radial loads. To insure long service life for the bearings and maximum punching speed, it is important that these bearings be mounted so as to eliminate thrust loads.

In most cases the main shaft can be removed and refitted without removing the tape pathway 25 and punch mechanism. This can be accomplished more easily if
Fig. 6-1 corner A in Fig. 6-1 is filed down.

See to it that the bearing housing is free of foreign matter. Check that there is no
Fig. 6-2 foreign matter in the corners A, Fig. 6-2. If the bearing housings contain Loctite or the like, scrape them clean using a scraper. Clean the bearings carefully.

Apply a thin coat of Loctite to the mating surfaces between the ball bearings and bearing shields D.

Note: Do not use too much Loctite since there is risk that the excess will be pressed into the bearings and cause damage.

Make certain that the ball bearings are positioned in the bearing shields so that they will not carry a thrust load when the main shaft is put into the chassis. Position the main shaft using a feeler gauge as follows:

1. Measure total play, $B_1 + B_2$.
2. Insert a feeler gauge half as thick as the total play into B_1, then press the main shaft with bearing against the feeler gauge.

Fit the removable bearing halves and insert four hex-socket screws. If one of these screws is shorter than the others it shall be inserted in C. Tighten the screws firmly, taking up on them alternately.

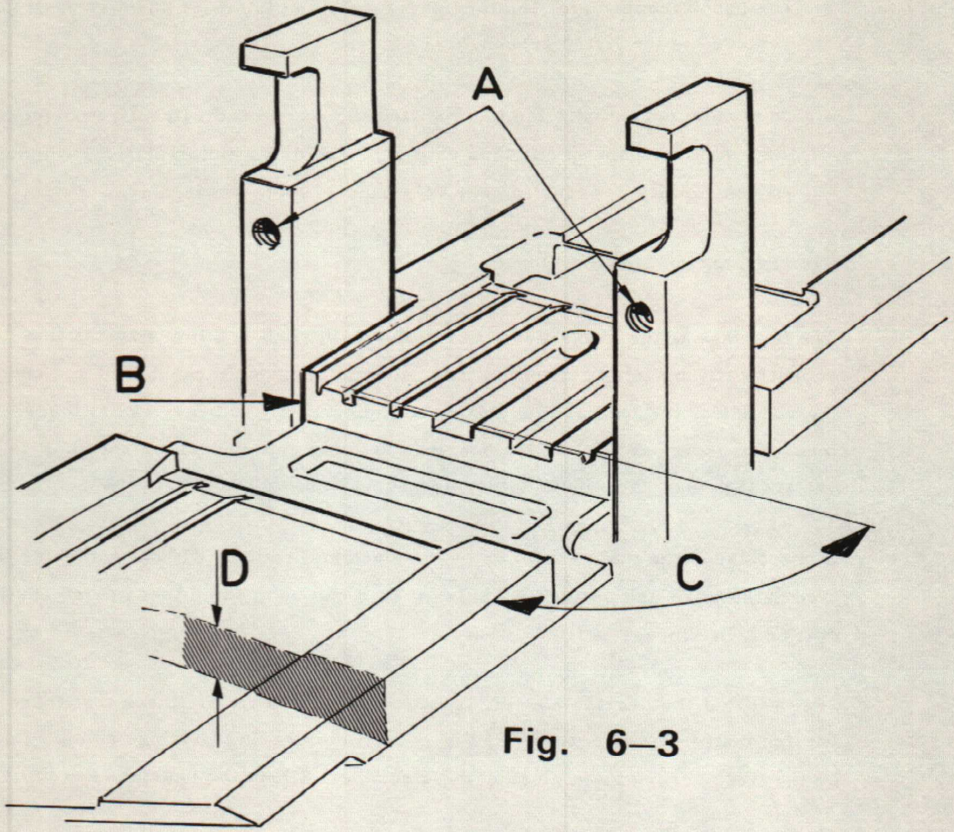

Fig. 6–3

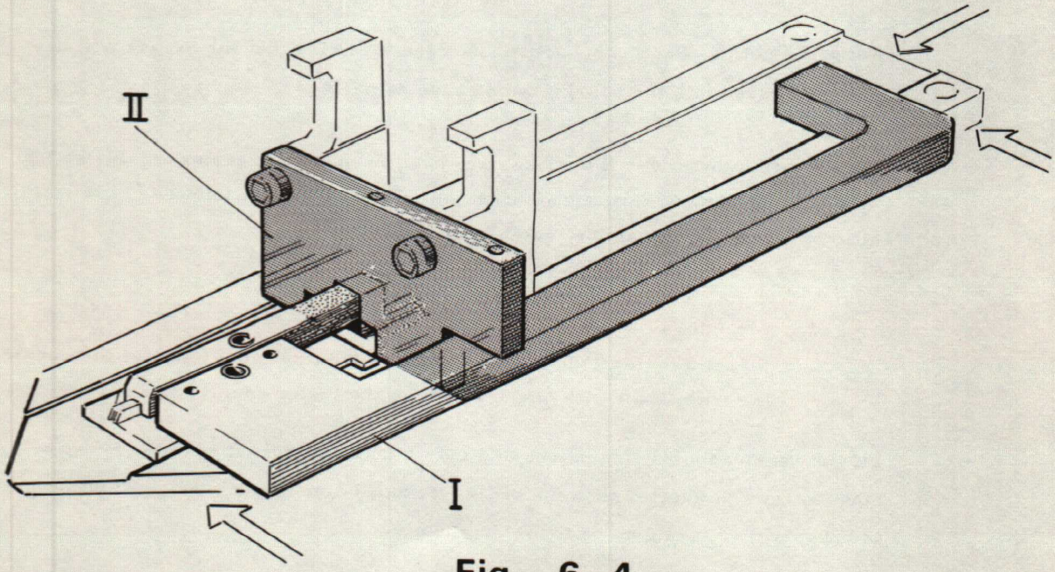

Fig. 6–4

Note: The main shaft shall not be exposed to heavy thrust loads - when fitting the belt pulley 48 or timing arms for example. Such loads can displace the bearings in the bearing shields.

Fig. 6-2 Fit washer E and the belt pulley to the main shaft.

6.5 FITTING TAPE PATHWAY 25

Fig. 6-3 If dimension D in Fig. 6-3 becomes less than 5.90 mm, the tape pathway shall be replaced. A worn tape pathway that is thinner than 5.90 mm can be sent to FACIT in Sweden to be reground and replated with chromium. The tape pathway and solenoid frame shall be considered a single unit. Consequently, regrinding or replacement of the tape pathway involves re-pinning the feed/brake solenoid frame 15 to the tape pathway.

Check the tape pathway before fitting it. If there are any sharp edges which can wear down the tape, they shall be removed with the whetstone.

Fig. 6-1 Advance the chad exhaust (B in Fig. 6-1) as far as possible and screw it in place. This will facilitate subsequent replacement of the main shaft. Using special tool I, check that the forward and rear sections of the tape pathway are properly aligned, i. e. that the tape pathway is neither bent nor twisted. Clean all mating surfaces on the tape pathway and the chassis. Check that the tape pathway contacts all four supporting points properly.

Fasten the tape pathway finger-tight with its four screws.

Fig. 6-4 Position special tool II on special tool I as shown in Fig. 6-4.

Attach special tool II to the punch mechanism retaining holes in the chassis. Press the tape pathway so that its reference edge presses against the special tools as
Fig. 6-4 shown by the arrows in Fig. 6-4. This ensures that the tape pathway is positioned
Fig. 6-3 as shown in Fig. 6-3, i.e. centred between holes A, recessed correctly back of the punch mechanism supports at B and at right angles to them C.

6.6 PUNCH MECHANISM

Fig. 6-5 Fig. 6-5 shows the parts of the punch mechanism.

These are manufactured to precise tolerances from specially selected materials. The punch mechanism is assembled using special tools and, from a servicing point of view, it should be considered as a single unit. In the event of trouble, it should be sent to the factory for repairs with the following exceptions:

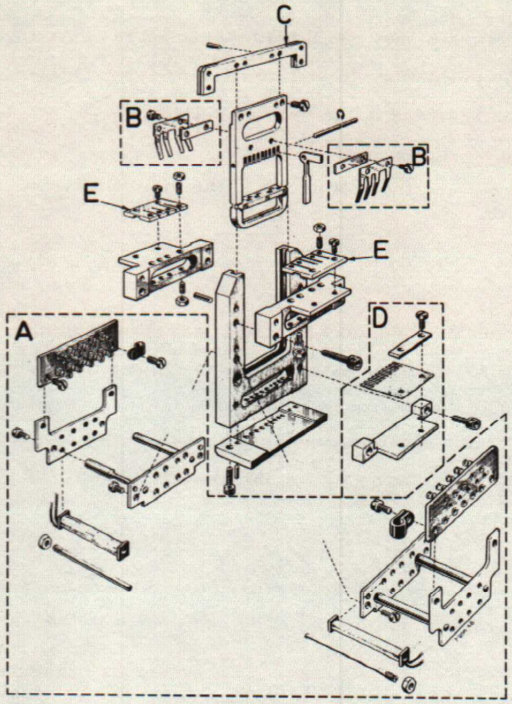

Fig. 6–5

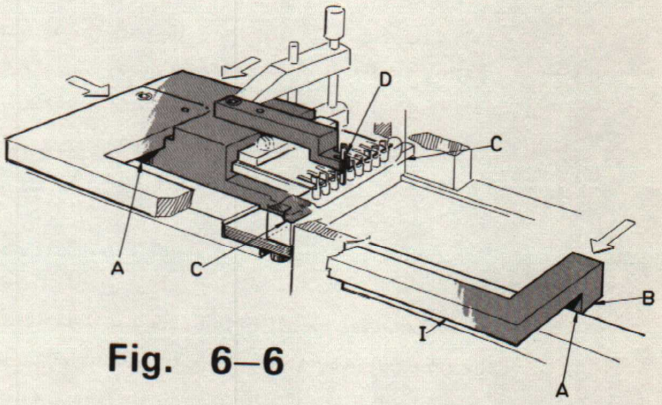

Fig. 6–6

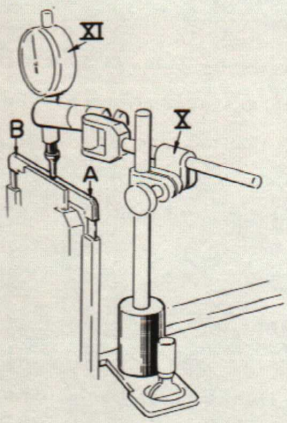

Fig. 6–7 a

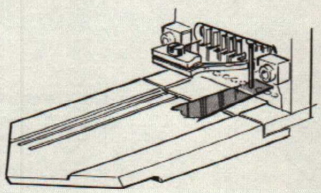

Fig. 6–7 b

Fig. 6-5

A. Faulty front and rear punch solenoid assembly
B. Faulty front and rear hammer springs 51 and 52
C. Faulty connecting rod crossarm 4
D. Faulty stop spring 44
E. Faulty front and rear hammer cushion 56

When a complete punch mechanism is replaced, all adjustments described in section 6.6 shall be carried out.

6.6.1 Vertical and lateral punch mechanism adjustments

See to it that the slots provided in the tape pathway for the punch mechanism and the chassis supports on which the punch mechanism is screwed are flat and free of burrs and foreign matter. Screw the rear solenoid assembly in place. Using special tool I, check that the tape patway is not bent. Secure the punch mechanism with its two retaining screws and tighten them enough to support the mechanism loosely. From the front, insert special tool I, as shown in Fig. 6-6, as far as it will go into the punch mechanism, while seeing to it that the tool contacts the tape pathway firmly and does not ride on burrs or dirt. Do not use excessive force.

Fig. 6-6

Secure the special tool I so that it presses against the reference edge of the tape pathway at two points and guides the punch mechanism laterally. See A and D in Fig. 6-6. Check that the end of special tool I rests against the tape pathway at B. Lift the punch mechanism up firmly so that the punch die presses against the two supports C and tighten the retaining screws firmly.

6.6.2 Adjusting the punch mechanism to the main shaft connecting rods and adjusting stop spring 44

Remove the beams 7 and 57 and check that the punch mechanism is positioned correctly both laterally and vertically relative to the tape pathway. See section 6.6.1. Fit the connecting rod crossarm 4, to guillotine 5 and the two connecting rod springs 1 to the crossarm. Tighten the two screws on the guillotine firmly. Attach the connecting rod crossarm to the connecting rods. Position dial gauge XI on the connecting rod crossarm between the connecting rods as shown in Fig. 6-7a. Turn the main shaft slowly by hand and measure the overall guillotine stroke length. Make a note of the length. Raise the guillotine to top dead centre and insert a 0.1 mm feeler gauge in the tape pathway beneath the feed hole punch pin 43. See Fig. 6-7b. The overall guillotine stroke length noted above is either a) less than or equal to 1.28 mm or b) greater than 1.28 mm. In both cases the dial gauge shall be positioned at points A and B in Fig. 6-7a and the adjustment shall be as nearly

Fig. 6-7

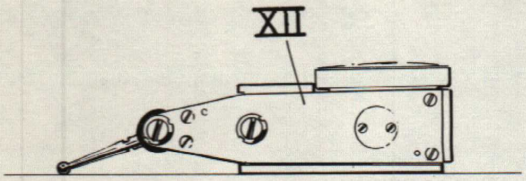

Fig. 6–8 a

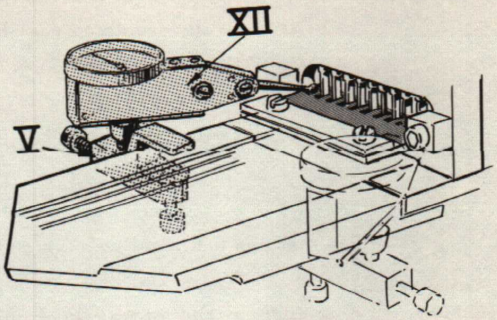

Fig. 6–8 b

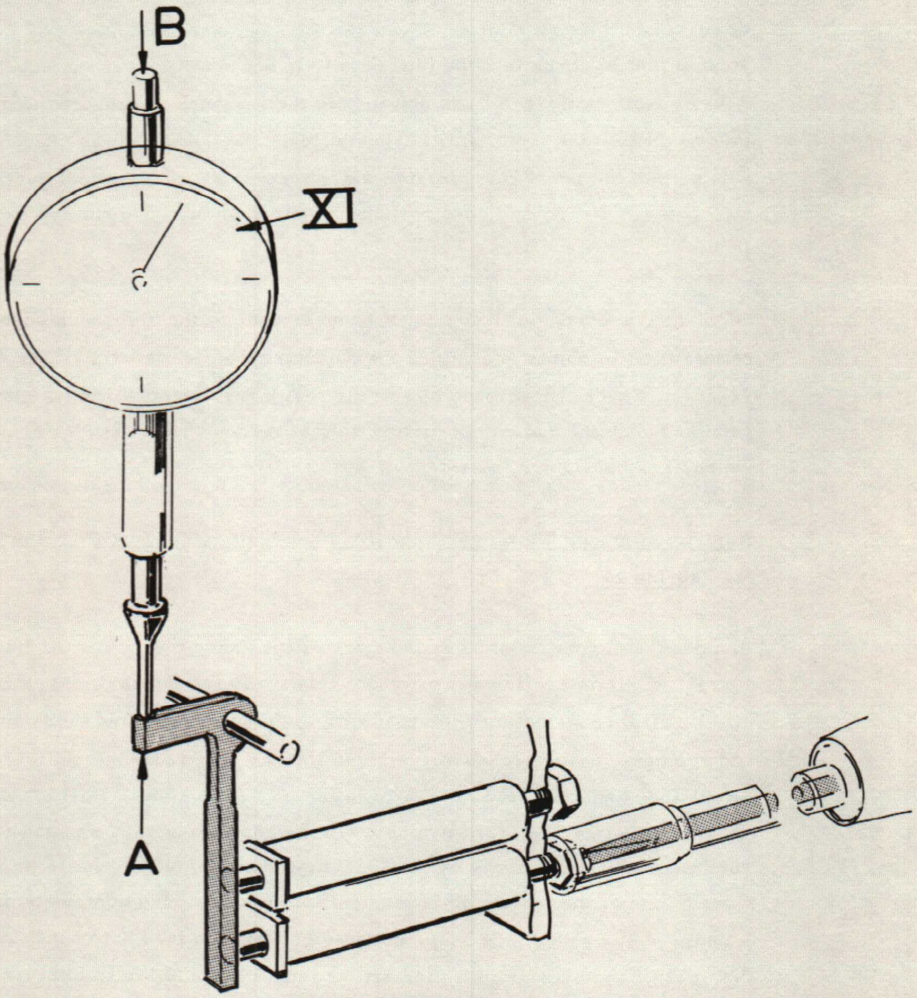

Fig. 6–9

identical as possible at both points. In case a) the crossarm/connecting-rod attachment shall be adjusted to provide 0.74 ± 0.01 mm of motion from top dead centre to the point at which the feed hole punch pin strikes the feeler gauge; in case b) this motion shall amount to 0.78 ± 0.01 mm. After adjustment the difference in total motion at A and B in Fig. 6-7a shall not exceed 0.02 mm.

Stop spring

Position dial gauge XI as shown in Fig. 6-7a. Preadjust DTI XII on a smooth
Fig. 6-8 surface as shown in Fig. 6-8a. Mount the DTI on holder V and attach the holder to the forward part of the tape pathway as shown in Fig. 6-8b so that the ball stylus contacts the spring. Turn the main shaft in its normal direction of rotation and adjust the way in which the spring holder is attached to the punch mechanism so that the spring starts to lift when the guillotine is 0.5 ± 0.05 mm from top dead centre. See also Fig. 6 - 13.

6.6.3 Adjusting the solenoid assembly

The front and rear hammer springs 51 and 52 shall be removed before adjusting the solenoid assemblies. Screw the front solenoid assembly firmly in place. Loosen the two long screws holding rear solenoid assembly.

Position dial gauge XI as shown in Fig. 6-9. Position the guillotine at top dead
Fig. 6-9 centre by using tool III as shown in Fig. 6-14. Press the hammer up and down.
Fig. 6-14 See A and B in Fig. 6-9. Check that the overall stroke is longer than $0.25 \begin{smallmatrix} +0.11 \\ -0 \end{smallmatrix}$ mm.

Retighten the two long screws on the rear assembly. Unscrew the punch solenoid cores so that they do not contact the hammers. Position the dial gauge
Fig. 6-7 at the centre of the guillotine as shown in Fig. 6-7a and turn the main shaft until the guillotine is at top dead centre. Secure the main shaft with special tool III.
Fig. 6-9 Replace the dial gauge as shown in Fig. 6-9. Use the screwdriver combined with socket wrench to screw in the lower punch solenoid 11 core until the dial gauge indicates hammer movement of less than 0.01 mm. Keep the screwdriver at this position and tighten the corresponding lock nut while checking that the dial gauge therewith returns to its original deflection. Proceed in the same manner with the upper punch solenoid 10. Then adjust the remaining pairs of punch solenoids.

Connect the punch unit to test box XV. Run a current of 300 mA (for a maximum of 15 seconds) through each pair of solenoids. Use spring tension gauge XIV as shown
Fig. 6-11 in Fig. 6-11 to ascertain how much force is required to pull the hammer from the
UB 690610 core. The pull-away force shall be more than 630 g without springs 51 and 52.

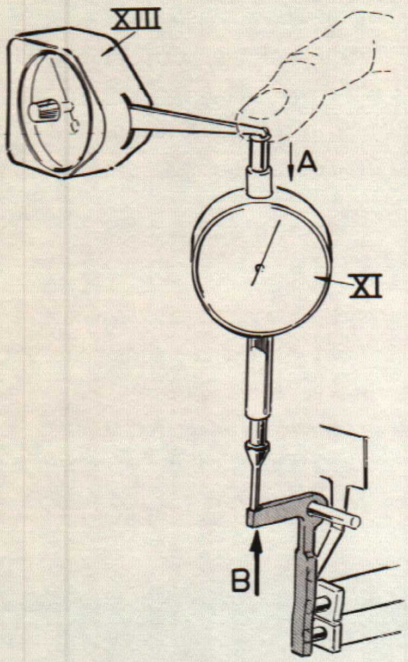

Fig. 6–10

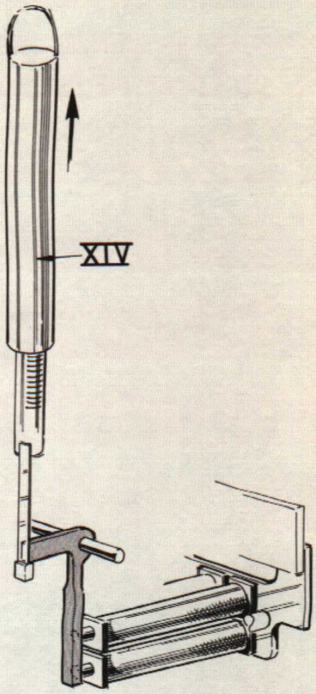

Fig. 6–11

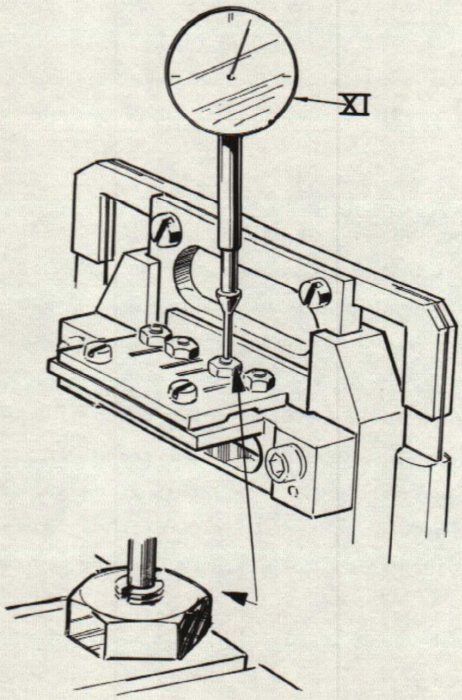

Fig. 6–12

6.6.4 Adjusting front and rear hammer springs 51 and 52

Unscrew and remove beams 7 and 57. Insert the hammer springs, while checking that each of them is unbroken and contacts the corresponding hammer properly.

Fig. 6-7 Check that the plates between the guillotine and hammer springs are in place. Position dial gauge XI at the centre of the crossarm as shown in Fig. 6-7a. Secure

Fig. 6-14 the main shaft using special tool III with the guillotine at top dead centre.

Fig. 6-10 Move the dial gauge to the outer end of the hammer shank as shown in Fig. 6-10. Move the hammer alternately up and down in directions A and B. Check that the overall stroke length is $0.25 \begin{smallmatrix} + 0.11 \\ - 0 \end{smallmatrix}$ mm. Read the dial gauge when the hammer is depressed. Then, using spring tension gauge XIII press down the dial gauge XI until the same reading is obtained. The combined force exerted by XIII and XI shall total $230 \begin{smallmatrix} + 50 \\ - 0 \end{smallmatrix}$ g.

If a hammer spring is too weak, it must be taken out and adjusted by careful bending.

Connect the punch unit to test box XV. Set the current at 300 mA (for maximum

Fig. 6-11 of 15 seconds). Using spring tension gauge XIV, positioned as shown in Fig. 6-11, check that at least 350 g are required to pull the hammer away from the solenoid.

6.6.5 Fitting the front and rear beams 7 and 57 and adjusting hammer deflection

Unscrew the upper and lower limit screws 58 and 6 before fitting the beams so that the screws do not obstruct the opening. Clamp both beams to frame 2 firmly using a paralell-jaw clamp or the like.

Adjusting hammer deflection - upper limit screw 58

Use a narrow stylus on the dial gauge XI, and position it at the same point on the

Fig. 6-12 screw for every measurement. See Fig. 6-12. See to it that the screw has no

Fig. 6-20 burrs. Turn the main shaft by hand in its normal direction and screw in the upper screw until it almost contacts its hammer. With the guillotine at top dead centre, position dial gauge XI as shown in Fig. 6-12. By alternately adjusting and measuring, set the screw so that it lifts $0.03 \begin{smallmatrix} + 0.02 \\ - 0.01 \end{smallmatrix}$ mm when the guillotine is passed through top dead centre by hand. Tighten the lock nut after adjusting. Adjust the eight upper screws in the same manner. Finally, check that each screw lifts a distance that lies within the above-mentioned limit.

Note: Adjust carefully. The hammer can be damaged if the screw is turned down too far.

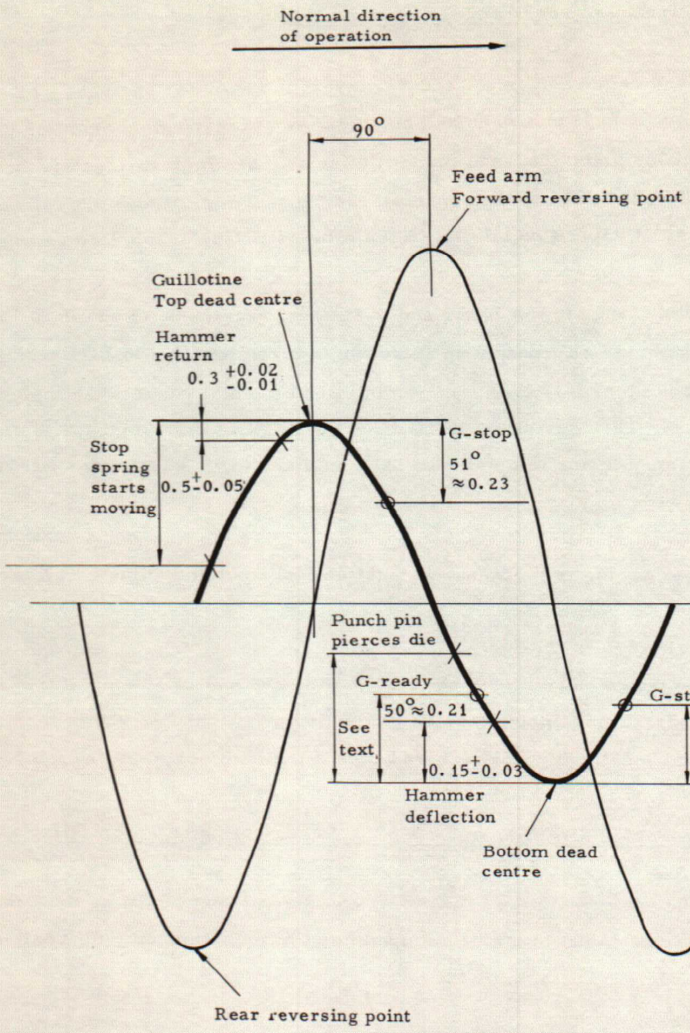

Fig. 6—13

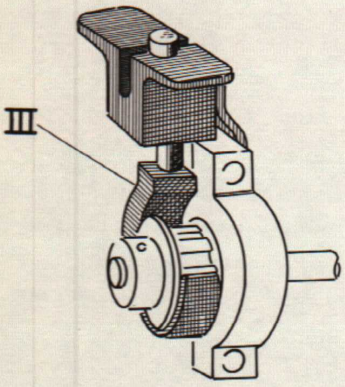

Fig. 6—14

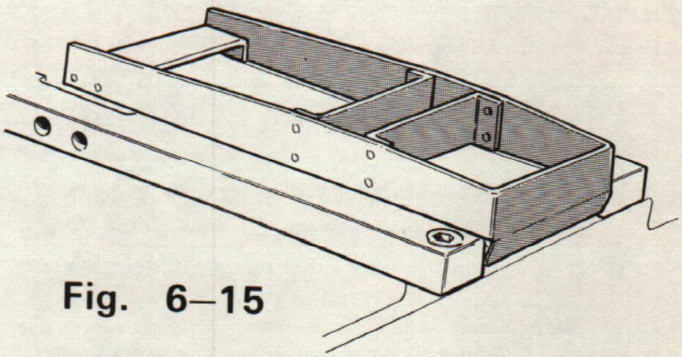

Fig. 6—15

Adjusting hammer deflection - lower limit screw 6

Unclamp and remove beams 7 and 57. Preadjust by inserting a 4 mm thick shim between the upper and lower limit screws, and turning in the lower limit screws until they contact the shim. Make this preadjustment for all four screws on each beam. This 4 mm thick shim is incorporated in special tool II.

Note: Do not turn any of the lower limit screws in so far that the corresponding upper limit screw lifts.

Replace the beams. Connect the punch unit to test box XV and run a current of 300 mA (for a maximum of 15 seconds) through each coil pair. Position dial gauge XI on crossarm 4 as shown in Fig. 6-7a and check that the hammers "click" out 0.15± 0.03 mm before bottom dead centre. See Fig. 6-13.

Fig. 6-7
Fig. 6-13
Fig. 6-20

Note: Turn the main shaft in its normal operating direction. See Fig. 6-20.

Fine adjustment of the screws can be speeded up by first calculating the length of adjustment for each screw -- then removing the beams and adjusting the screws accordingly. The screws move 0.4 mm per turn; a quarter of a turn thus corresponds to 0.1 mm.

Tighten the lock nuts firmly. Secure the beams with their two retaining screws. Then check that the hammers "click" out at the right position.

6.7 FITTING AND ADJUSTING FEED ARM 31 AND CONNECTING ROD SPRING 30

If optimum tape feed is to be achieved, it is vital that only fault-free parts be assembled without force. The parts must fit perfectly. See to it that connecting spring 30 is not under tension in its feed-arm mounting.

Assembling feed arm 31

Check that the parts riveted to the feed arm are not loose. Even a very small amount of play can lead to unstable inter-row spacing. Check that the top surface of the feed arm is flat and free from both burrs and rust. Make certain that the feed arm is not twisted. Check as shown in Fig. 6-15 that the feed arm does not ride on any burrs on the tape pathway. Smooth the holes for retainer plate M, shown in Fig. 6-16, using the whetstone.

Fig. 6-15
Fig. 6-16

Position the feed arm in the chassis. Tighten the screws finger-tight. At the same time, insert the connecting rod spring (B in Fig. 6-16) between the two spacers C and D that are riveted to the feed arm. Fasten the connecting rod spring by fitting adjusting screw E as follows:

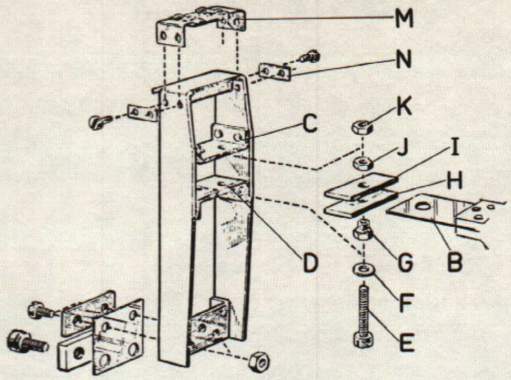

Fig. 6–16

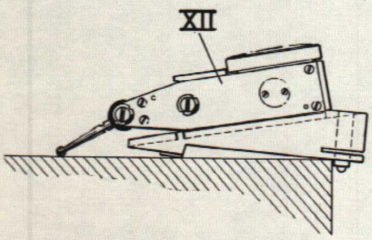

Fig. 6–17 a

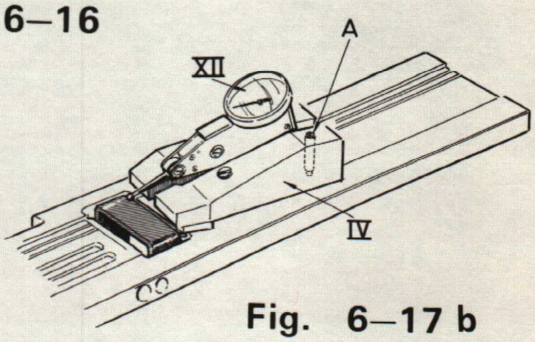

Fig. 6–17 b

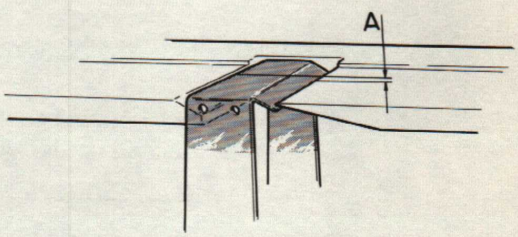

Fig. 6–18

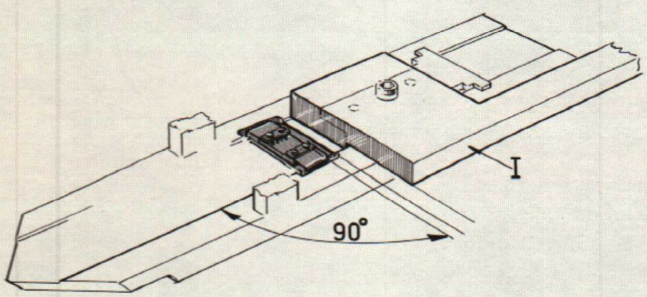

Fig. 6–19

Fig. 6-16 Insert screw E with washer F from beneath spacer through special nut G, plate H, connecting rod spring B, plate I, nut J, spacer C and nut K. The shoulder on special nut G shall pass through the hole in plate H, connecting rod spring B, and through part of plate I. See to it that spring B passes easily over nut G. Otherwise, a thrust load can develop on the connecting rod ball bearing. Preadjust nut G so that the spring B is almost up to its highest possible position. Leave nut J finger-tight for the present.

Adjusting the feed arm

Position DTI XII on holder IV as follows:

1. Mount DTI on holder IV.

Fig. 6-17

2. Bend down the stylus.
3. Press DTI with holder against a flat edge as shown in Fig. 6-17a.
4. Move DTI with holder to tape pathway and position it as shown in Fig. 6-17b but with the stylus contacting the tape pathway just behind the feed arm - therewith providing a slight deflection. If such is not the case adjust using screw A until a deflection is obtained.

Move DTI with holder to the tape pathway back of the feed arm as shown in Fig. 6-17 Fig, 6-17b. Turn the main shaft until the feed arm top surface is parallel with the tape pathway, i.e. both the front and rear edges of the top surface are at the same height. Check by sliding the DTI with holder back and forth. Secure the main Fig. 6-14 shaft in this position using special tool III. Using the DTI adjust the feed arm to a height at which its upper flat surface lies 0.1 ± 0.02 mm above the tape pathway. See A in Fig. 6-18 Fig. 6-18. The feed arm shall also be positioned laterally at the centre of the tape pathway and it shall be perpendicular to the reference edge of the tape pathway. The perpendicularity of the feed arm to the tape pathway is checked most Fig. 6-19 easily using special tool I as shown in Fig. 6-19.

Tighten the feed arm retaining screws in the chassis and unlock the main shaft. Secure brake plate 28 (see section 6.9). Position dial gauge XI as shown in Fig. Fig. 6-21 6-21. Turn the main shaft by hand in the normal direction and preadjust the attachment of spring 30 to the feed arm so that the overall stroke length will be 2.5 mm. Make certain that the feed arm does not contact the tape pathway.

6.8 FITTING AND ADJUSTING TIMING PULSE TRANSMITTERS 32-37

Note: The magnetic cores are magnetized to provide signals of the proper polarity. Handle with care.

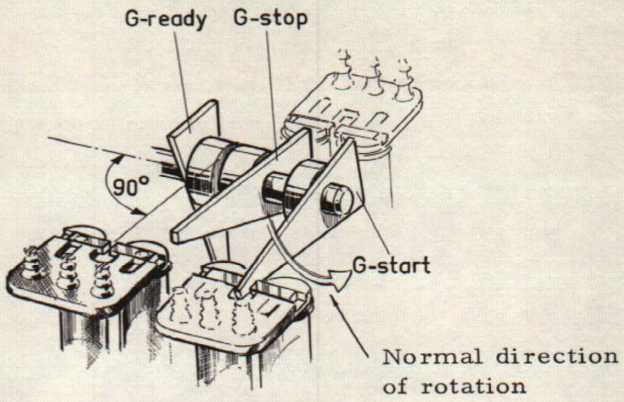

Fig. 6–20

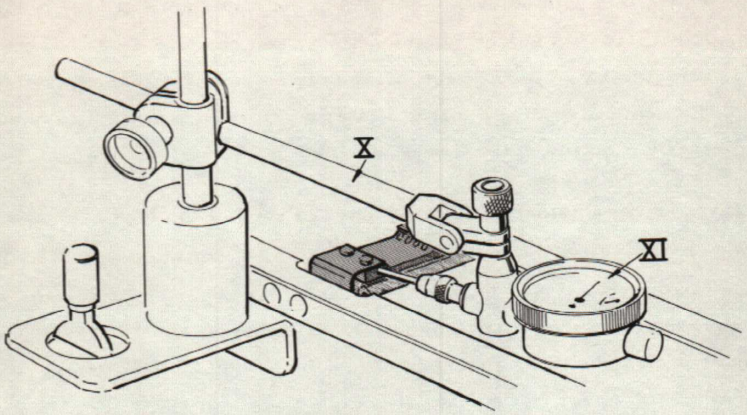

Fig. 6–21

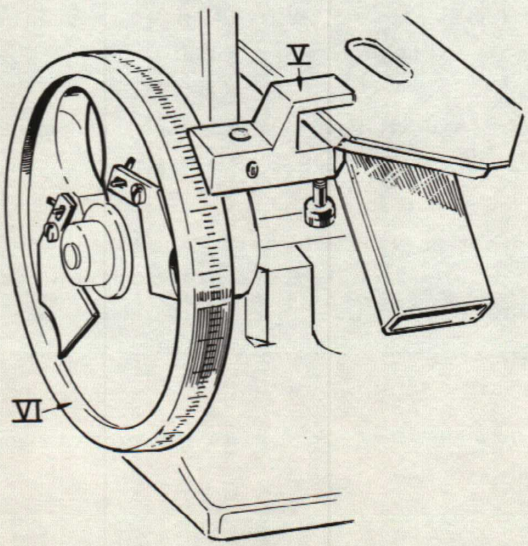

Fig. 6–22

Secure the coil pairs to the chassis being very careful not to damage them. The cores shall be parallel and equally high. The air gaps shall be aligned perpendicularly to the main shaft. Fitting is facilitated if one of the arms is fitted to the shaft and then turned into the air gap. Insert a feeler gauge that fills the air gap between the arm and one of the cores. Align the coil pairs with your fingers while screwing the magnetic cores in place. Do not tighten the nuts too tightly. If necessary, remagnetize the cores.

Fig. 6-20 Fit the pulse transmitter arms to the shaft as shown in Fig. 6-20. Do not apply too much force without using some sort of device to hold the main shaft.(Excessive force may displace the main shaft ball bearing so as to develop a thrust load). Do not tap the pulse transmitter arms into place.

Turn the shaft carefully by hand and adjust the arms and cores so that they do not contact each other.

Fig. 6-21 Position dial gauge XI and holder X as show in Fig. 6-21. Position protractor
Fig. 6-22 wheel VI with index V as shown in Fig. 6-22. Note that there are 2° between each of the protractor wheel graduations.

Turn the main shaft by hand and measure the overall motion of the feed arm. Divide the value obtained (approx. 2.5 mm) by two and turn the main shaft until a corresponding deflection (approx.1.25 mm) is obtained on the dial gauge. The feed arm will now be at its centre position with the guillotine at bottom dead centre. Hold the main shaft stationary by hand at this position and turn the protractor wheel VI to an arbitrary initial position (referred to below as 0°).

G-ready

- Turn the main shaft 50^{o}(25 graduations) opposite to the normal rotation direction (see Fig. 6-20) from its initial position of 0°. Hold the main shaft stationary at this position. Turn the G-ready arm 32 into the air gap and screw arm in place on shaft.

Fig. 6-20

G-stop

- Turn the main shaft 128° (64 graduations) opposite to the normal rotation direction (see Fig. 6-20) from its initial position of 0°. Hold the main shaft stationary at this position. Turn the G-stop arm 33 into the air gap and screw arm in place on shaft.

G-start

- Turn the main shaft 51° (25.5 graduations) in the normal rotation direction (see Fig. 6-20) from its initial position of 0°. Hold the main shaft stationary at this position. Turn the G-start arm 34 into the air gap and screw arm in place on shaft.

- Recheck the adjustment of all arms.

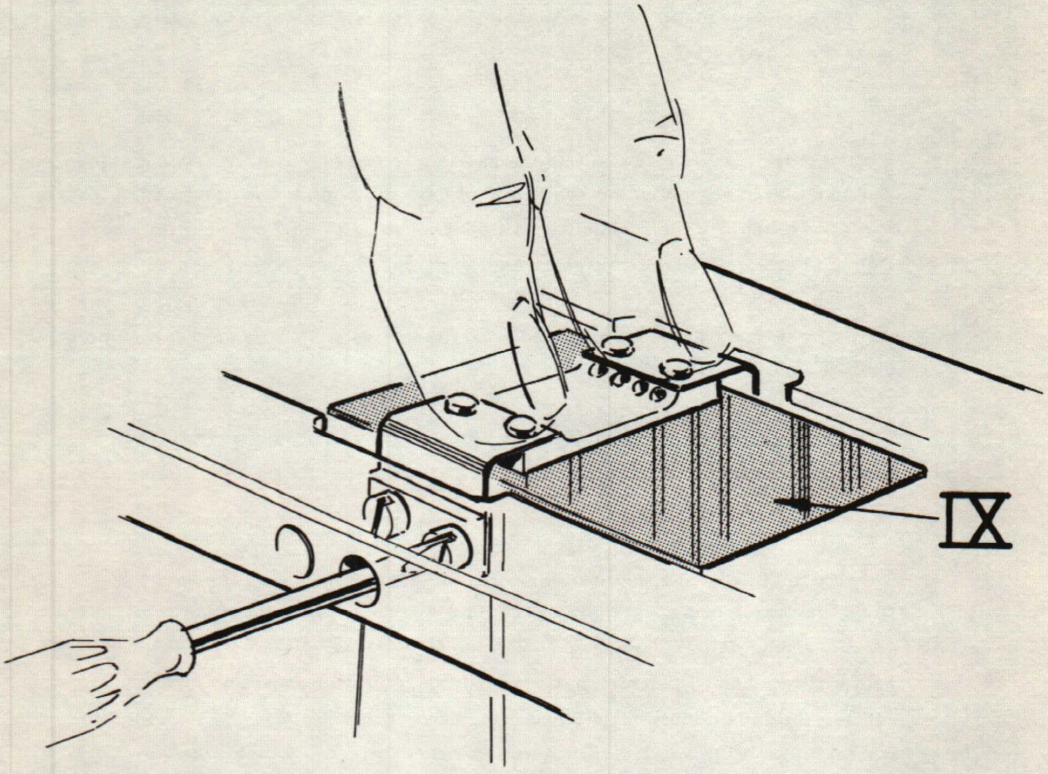

Fig. 6–23

The timing pulse transmitter arms can also be adjusted by positioning the dial gauge as shown in Fig. 6-7a and positioning the arms in accordance with the values shown in Fig. 6-13.

Fig. 6-7a
Fig. 6-13

Magnetization

Connect the punch unit to test box XV. Depress the magnetization pushbutton for about 5 seconds, while simultaneously rotating the main shaft. Magnetization can also be carried out by applying 50 V directly across the coil pair for about 5 seconds, making certain to connect up the negative lead to the black terminal on the coil pair. This magnetizes G-start, G-stop and G-ready.

6.9 FITTING AND ADJUSTING THE BRAKE PLATE 28

See to it that the brake plate springs are flat and under no tension. Smooth all surfaces that come into contact with the tape using a whetstone. Attach the brake plate to the feed arm using the four retaining screws so that it is perpendicular to the tape pathway as shown in Fig. 6-19. Do not forget to position shims N in Fig. 6-16 correctly outside the spring. Turn the main shaft and secure it at a position where the brake plate retaining screws will be easily accessible through the holes in the tape pathway.

Fig. 6-19
Fig. 6-16

Insert feeler gauge IX between the feed arm and brake plate. Press the brake plate down carefully and tighten the screws as shown in Fig. 6-23. Remove the tool and position dial gauge XI mounted on holder X against one of the four rivets which secure the brake plate. Depress the brake plate against the feed arm and check that, when first depressed, the rivet drops at least 0.15 mm but not more than 0.20 mm. Recheck several times for each rivet.

Fig. 6-23

Note: Lift the dial gauge stylus away from the rivet after each check.

6.10 FITTING AND ADJUSTING THE SOLENOID HOUSING

The stability of the tape feed depends in large part on the adjustment of the solenoid housing.

- Foreign matter shall not obstruct feed rocker 17 motion between feed solenoid 14 and brake solenoid 16.
- There shall be virtually no play in the feed rocker ball bearing 18.
- The spring 26 and rear brake plate 24 shall be correctly fitted and adjusted.

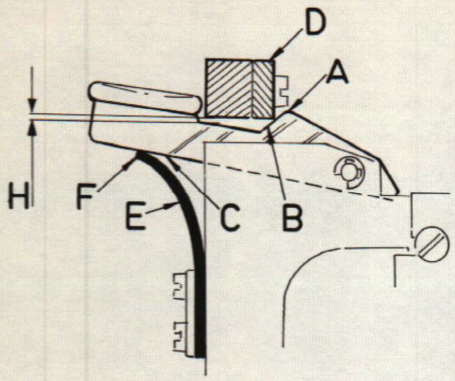

Fig. 6–24 a

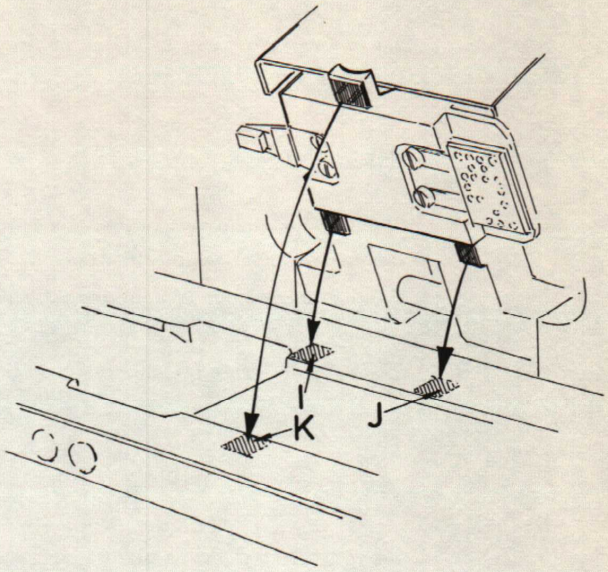

Fig. 6–24 b

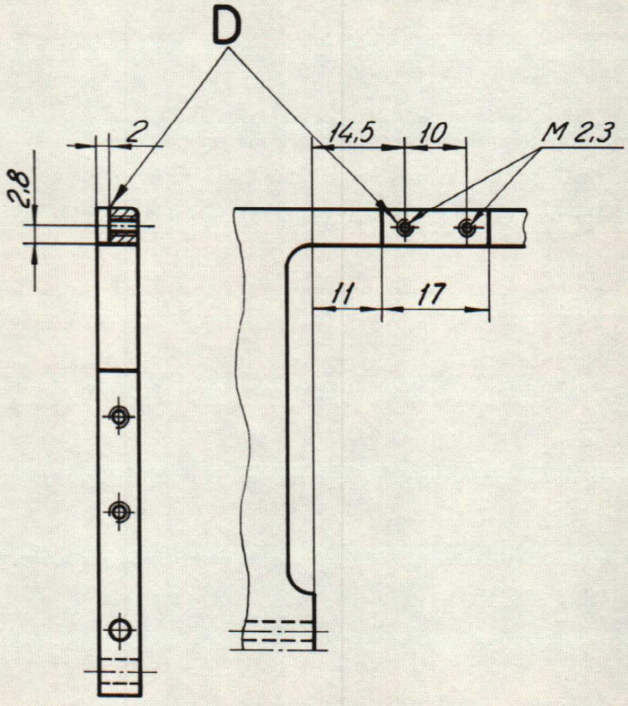

Fig. 6–25

- The solenoid housing catch which secures against the feed/brake solenoid frame shall operate correctly. See Fig. 6-24a.

Fig. 6-24a

- The solenoid housing shall be attached to the tape pathway with pins so that there is good contact at the three supporting points shown in Fig. 6-24b.

Fig. 6-24b

Position the feed/brake solenoid frame 15 on its guide pins and screw it in place. (Spring 26 and brake plate 24 shall not yet be mounted).

Check that the solenoid housing catch meets the following requirements. See Fig. 6-24a.

Fig. 6-24a

1. Corner A shall be free from burrs and somewhat rounded. If necessary round off with whetstone.
2. Surfaces B and C shall be smooth and without burrs. Smooth with whetstone.
3. In more recent units there is a steel stop D recessed into the frame. In addition, spring E is built up of four separate leaves. (Older frames without steel stops can be modified as shown in Fig. 6-25. The single-leaf spring should be replaced with a four-leaf spring in conjunction with this modification.) The spring shall run easily on surface C. This can be improved by bending the springs somewhat at point F.

Fig. 6-25

4. Lower the solenoid housing into position, checking to see that the catch operates and holds properly without binding.

   Note: Lower the solenoid housing into position by pressing directly adjacent to the catch.

Fig. 6-24a

5. Check that the clearance H is about 1 mm.
6. When lowered, the solenoid housing shall contact the tape pathway at three supporting points I, J and K. Check the contact one point at a time using thin cellophane. Insert the cellophane at the point in question and check that it is pinched firmly in place. If poor contact is revealed (particular at point K), the solenoid housing should be re-pinned to the frame. See section 7.1.

Fig. 6-24b

Adjusting solenoids and feed rocker

If there is foreign matter on the solenoids, they shall be removed and thoroughly cleaned. Attach the solenoids finger-tight with their retaining screws. See to it that the feed rocker armature can move an equal distance in both directions from

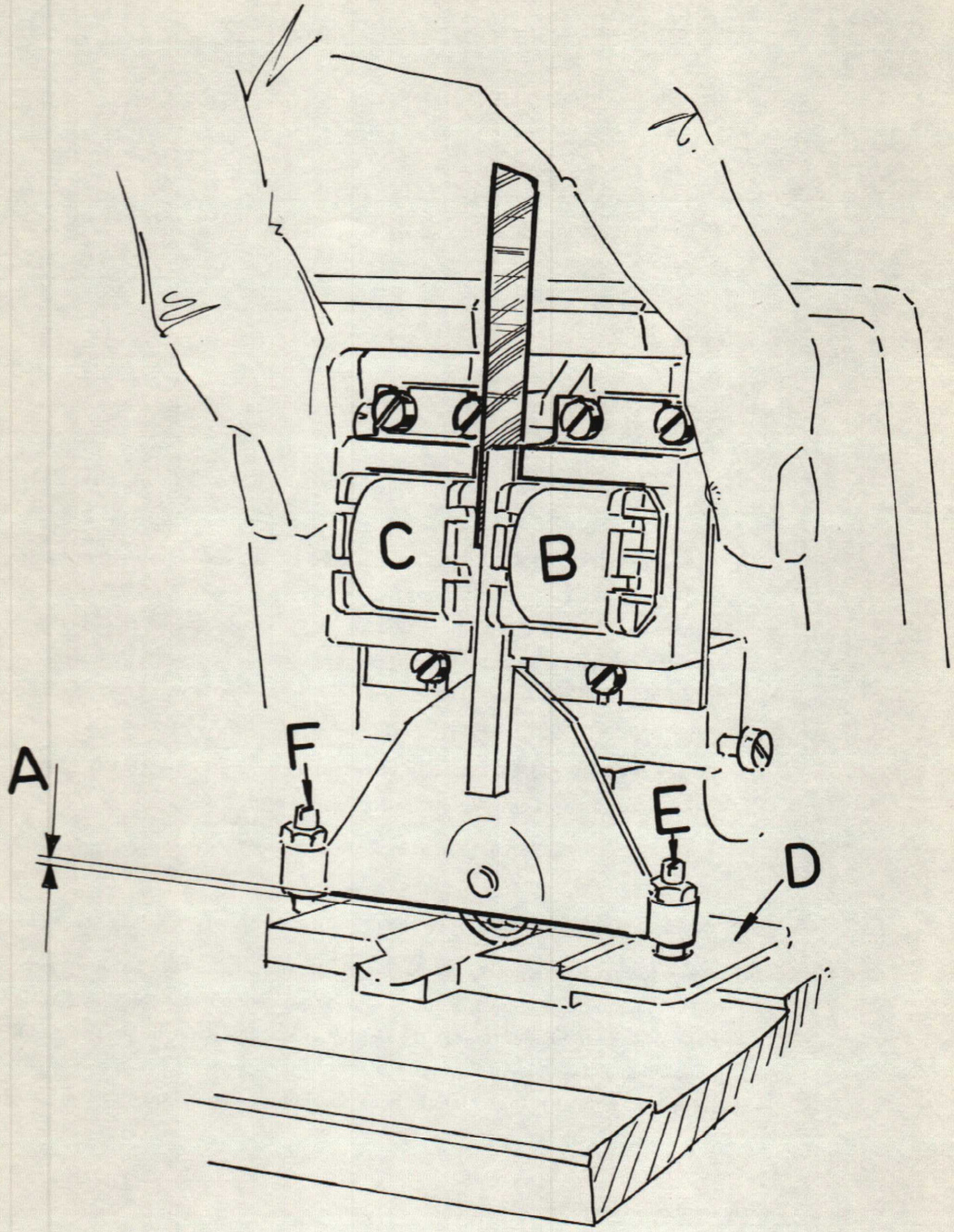

Fig. 6–26

a vertical line drawn through the feed rocker axis. Adjust by pressing the two solenoids toward the feed rocker armature as shown in Fig. 6-26 while simultaneously moving the entire assembly so that the bottom surface of the triangular portion of the feed rocker (line between the two adjusting screws) is parallel with plate D. A visual check will suffice here.

Fig. 6-26

Tighten the retaining screws for solenoid C. Insert a 0.15 mm feeler gauge approx. 15 mm between solenoid C and the feed rocker armature. Press solenoid B toward the feed armature and tighten its retaining screws. Remove the feeler gauge. Check the air gaps on both sides of the feed armature with the 0.15 mm feeler gauge. The gauge must extend to the centre of the middle leg of the core, but no further. Screw in two adjusting screws E and F and screw on their lock nuts. Do not turn these screws down too far. Screw the rear brake plate 24 in place and adjust it so that it presses against the centre of a 5-track tape and so that it is parallel to the solenoid housing. Screw spring 26 in place using the two retaining screws. Smear a little dark oil-based paint on the surface that contacts brake plate 28. Lower the solenoid housing until it catches. Turn the main shaft by hand and turn down the adjusting screw far enough to provide a light pressure. Raise the solenoid housing and check that the lug has left an evenly distributed paint impression at the centre of brake plate 28.

If necessary, adjust by altering the mounting of spring 26 or by bending spring 26. The spring must be unscrewed and removed in order to bend it.

6.11 FITTING THE LUBRICATION SYSTEM

The guillotine and lug 27 are lubricated with oil from the oil container via three capillary tubes. The lubrication system includes a valve which shuts off the oil flow when the punch unit is idle. The ends of the three capillary tubes shall be positioned close enough to the three lubrication points 3, 9 and 12 so that the oil drops are wiped off by the motion of the parts concerned.

Fit the oil container and connect up the plastic tube. Run the tube across the base of the motor mount using clamps and connect it to the oil shut-off valve. Screw the shut-off valve and capillary tubes in place on the chassis adjacent to the punch mechanism. See to it that the tube which lubricates lug 27 is secured approx. 0.2 mm from spring 26 so that the oil drop at the open end of the tube always remains in contact with the spring. Connect the three capillary tubes to the valve.

Fill the container 2/3 full with Mobil Oil Vacuoline 1409. Check that the oil runs down to the valve and that no air bubbles form. Switch the power to the valve on and off repeatedly. The on/off switching imparts a certain amount of pumping action to the valve, thus forcing oil through the three capillary tubes. If no oil

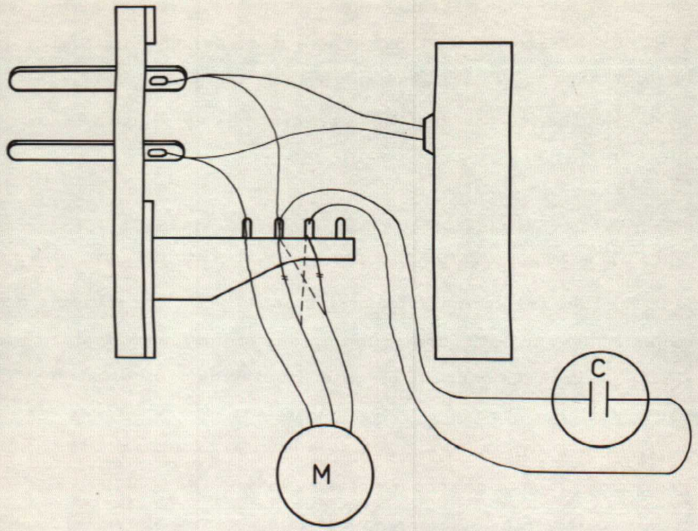

Fig. 6–27

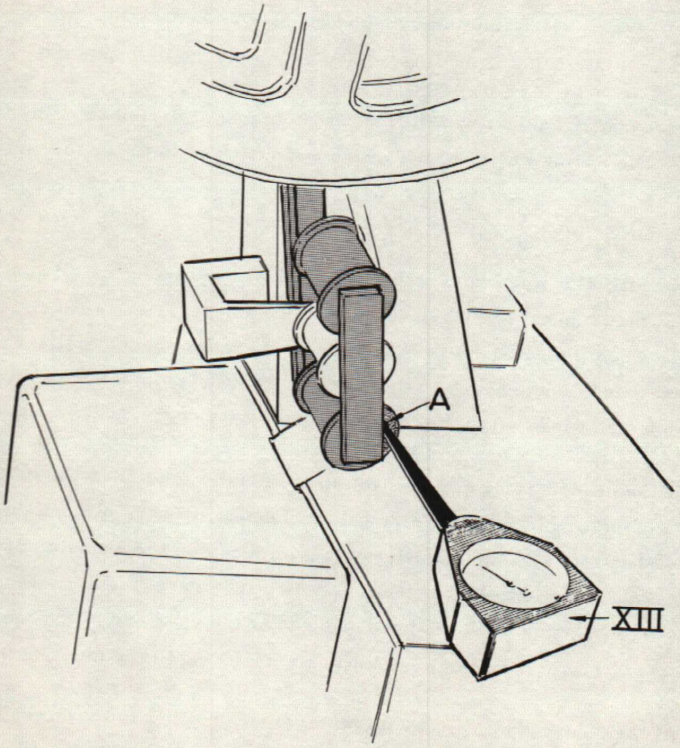

Fig. 6–28

passes through the capillary tubes, remove the plastic tube from the valve outlet. Then switch the power on and off as above, letting oil run through the plastic tube and the valve until there are no visible air bubbles. Shut off the power and press the plastic tube firmly onto the nipple. This procedure can be repeated until oil passes through the three tubes.

6.12 FITTING THE MOTOR

If possible run the punch unit on test rig XVI or the like. Trial runs and adjustments can then be carried out prior to fitting the motor. See section 6-14.

Secure the motor with its four retaining screws. Screw the large belt pulley in place. See to it that the pulley is positioned so that the belt will run easily. Fit the belt and adjust the motor mount position on the chassis so that the belt can be depressed about 6 mm at its centre. Screw the capacitor into its mount beneath the main shaft pinion. Solder the motor leads in place as shown by the continuous lines in Fig. 6-27. Turn on the power to the motor and check that the main shaft turns in the right direction. See Fig. 6-20.

Fig. 6-27
Fig. 6-20

6.13 CHECKING THE TAPE REEL HOLDER

Check:

- That the removable flange can be removed and replaced easily.
- That the fixed flange can be easily adjusted for tapes of different width.
- That the hub is firmly secured.
- That the aluminium ring on the brake wheel is not loose.
- That the brake arm does not bind when raised and lowered.
- That the fixed roller and the two rollers on the brake arm turn easily.
- That the brake arm can be lifted over the fixed rollers and that the two rollers on the brake arm can still turn freely.

Measure the force exerted by the brake spring by using gauge XIII at point A as shown in Fig. 6-28, and lift the brake arm until all three rollers are in line. The force exerted by the spring shall now be 100 ± 5 g. If necessary, an adjustment can be made by turning the shaft on which the brake arm is mounted.

Fig. 6-28

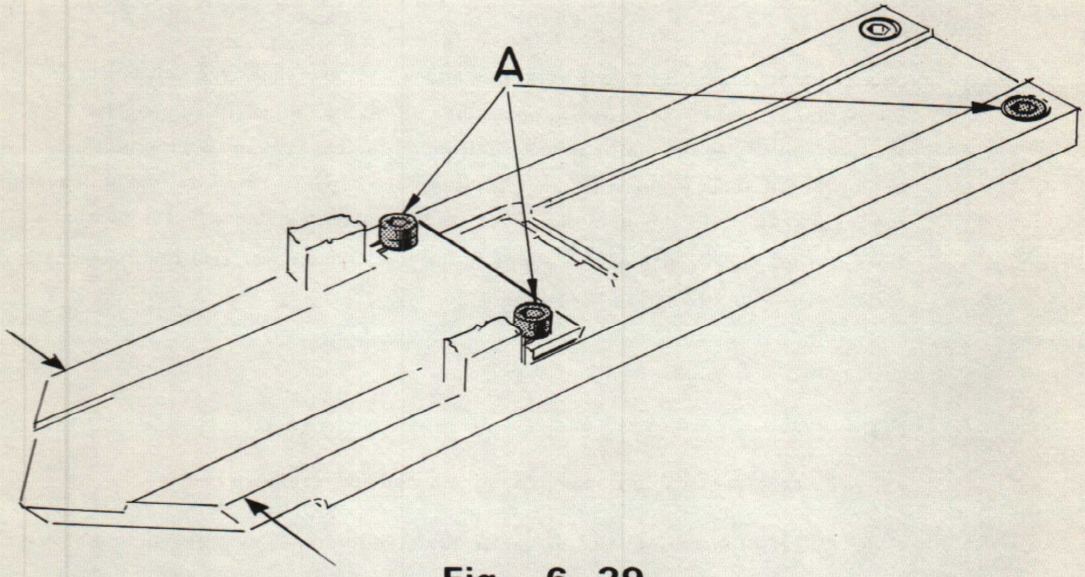

Fig. 6–29

6.14 TRIAL RUNS

The adjustment of the feed arm is facilitated if trial runs are made on test rig XVI, wherewith it is advisable to use the punch unit motor as drive motor. In such case the phase-displacement capacitor for the motor must be re-connected (see broken lines in Fig. 6-27) so that the main shaft will rotate in the right direction (see Fig. 6-20).

Fig. 6-27
Fig. 6-20

When starting the punch, see to it that the adjusting screws 13 and 19 for tape feed and braking are not screwed down too far. Check also that the lubrication tubes are correctly positioned approx. 0.2 mm from the three lubrication points, and check that a tape (maximum thickness used in the system) can pass through the feed arm and punch mechanism. Lubricate the movable parts of the punch mechanism carefully, and put a drop of oil on lug 27. Turn the main shaft by hand and check that the movable parts do not bind or display excessive play. Turn on the motor and check that the main shaft rotates in the right direction. Check that leaf spring 22 is properly attached.

The stroke length of the feed arm shall be preadjusted using dial gauge XI. Set the overall stroke length to 2.51 mm. See Fig. 6-21.

Fig 6-16

Note: Use <u>two</u> open end wrenches when loosening or tightening the nuts J and K in Fig. 6-16. The second wrench will prevent the arm from being twisted.

Turn on the power to the motor and oil shut-off valve. Let the punch unit run for a while before proceeding. If necessary, re-lubricate the three lubrication points and check that everything is running properly. Stop the motor. Insert the tape and lower the solenoid housing. Feed out tape on which blocks of all-hole characters are interspersed with blocks of blank tape. Check that the inter-row spacing is correct as instructed below. If necessary adjust tape feed as instructed in section 6.15.

Connect the punch unit to test box XV and check the punching speed at rated voltage. It shall be 150 $\pm$ 8 rows per second. Using template VIII, check that the distance between the centres of the feed holes and the reference edge of the tape is 9.96 $\pm$ 0.1 mm for 5, 6, 7 and 8 track tapes. This distance shall be 11.02 $\pm$ 0.1 mm for typesetting tapes.

Fig. 6-29

A minor adjustment can be made by loosening retaining screws A in Fig. 6-29 and carefully tapping the tape pathway to one side or the other (making certain that the feed arm does not contact the tape pathway). Secure the tape pathway by retightening the screws firmly. <u>Be very careful when making this adjustment, otherwise the stability of the inter-row spacing can be impaired.</u>

UB 690610

Check that the lubrication system operates properly.

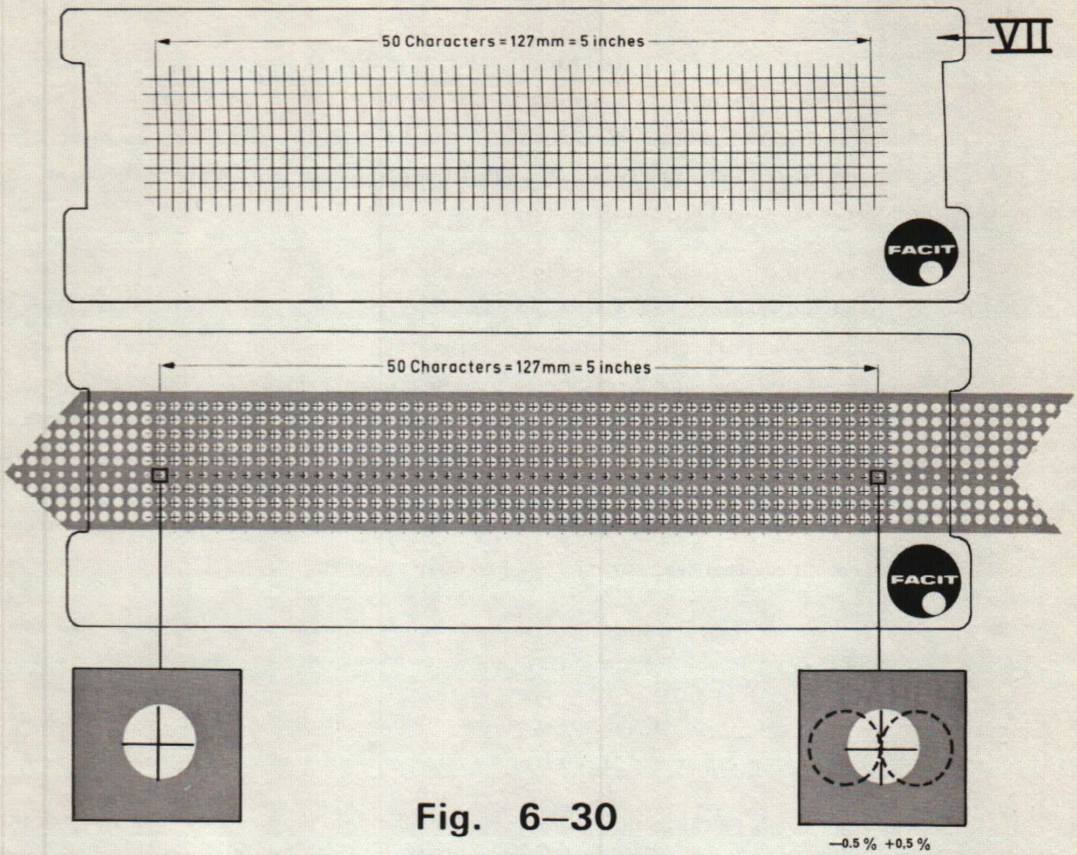

Fig. 6–30

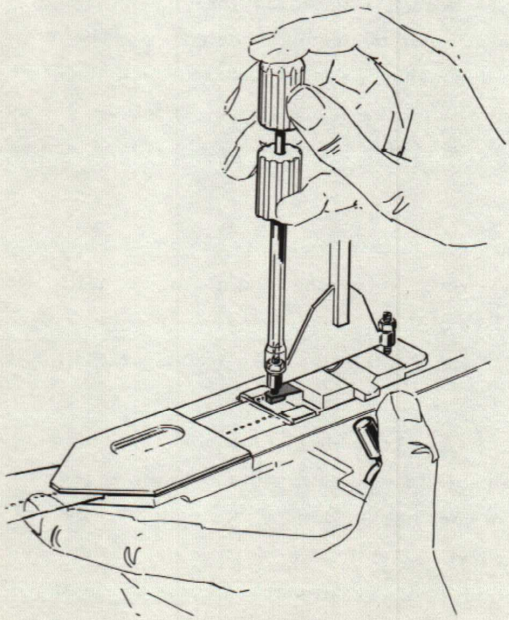

Fig. 6–31

Insert the punch unit in its enclosure, seeing to it that the chassis does not bind in its mounting and that the chad exhaust is unobstructed and does not bind against the enclosure.

6.15 ADJUSTING THE INTER-ROW SPACING

Stable inter-row spacing requires that feed arm 31, the tape feed mechanism and the timing pulse transmitters be adjusted correctly relative to each other. The G-start and G-stop timing pulse transmitters control (via the control unit) the energizing of the feed solenoid 14 and brake solenoid 16. A weak motor which varies in speed while punching blocks of blank tape and blocks of all-hole characters can cause unstable inter-row spacing. Play in the bearings and/or transmission can also lead to instability. It is very important that brake plate 28 move perpendicularly to the tape pathway. The feed arm must not be bent or twisted.

If adjustment is undertaken in test rig XVI (preferable since the feed arm will be more easily accessible), the punch unit motor should be used.

Fig. 6-30 Checking the inter-row spacing

1. Put the punched tape on the template shown in Fig. 6-29 so that the centre of the feed track hole coincides with the intersection of the leftmost vertical line on the template and one of the horizontal track lines.
2. Check that the centres of the feed track holes - from the leftmost to the rightmost vertical line - are directly above the track line. Check that one vertical line is visible in every feed hole.
3. The inter-row spacing is indicated by the rightmost vertical line. If the hole lies to its right, the inter-row spacing is long. If the hole lies to its left the inter-row spacing is short. The maximum permissible deviation is $\pm$ 0.5%, as shown in Fig. 6-30.

Basic adjustment

Load a reel of tape, lift the guillotine to top dead centre and pull the tape through far enough so that it projects beyond the tape outlet. Loosen the lock nuts and screw up both adjusting screws 13 and 19. Turn on the power (at the control unit). Do not touch the lever on the punch unit yet. Position a screwdriver combined
Fig. 6-31 with socket wrench as shown in Fig. 6-31. Pull the tape slowly through the punch while simultaneously screwing down the rear adjusting screw 19 far enough to almost bind the tape fast. Tighten the rear adjusting screw lock nut. Move the screwdriver to the front adjusting screw 13. Move the tape feed lever forward and simultaneously turn screw 13 down so that tape feed commences and distinct
UB 690610 holes appear. Turn the screw 13 to provide the maximum distance between holes.

Be very careful not to turn the screw 13 too far down. Adjust only while tape is being fed through the punch and while listening to make certain that the noise made by the punch does not change.

Note: Always lock the lock nut between every adjustment. Hold the screw at its adjusted position while tightening the lock nut.

With the timing pulse transmitters adjusted as described in section 6.8, the adjusting screws 13 and 19 shall be adjusted for maximum inter-row spacing and the feed arm shall be adjusted for correct inter-row spacing. It is recommended that the feed arm be preadjusted for an overall motion of 2.50 mm measured at brake plate 28 as shown in Fig. 6-21.

Fig. 6-21

Fine adjustment

Start by feeding out at least 10 metres of tape punched alternately with blocks of blank tape and blocks of all-hole characters. Check the tape with a template as instructed above. Turn the rear adjusting screw 19 carefully up and down to obtain maximum inter-row spacing. Observe the tape as it leaves the punch giving special attention to the feed hole track relative to the tape pathway and other similar factors. Recheck the inter-row spacing. Make the same adjustment using the front adjusting screw 13. Recheck the inter-row spacing. Adjust the rear and front adjusting screws alternately until the maximum inter-row spacing is obtained, and until the inter-row spacing remains the same for blocks of blank tape and for blocks of all-hole characters.

Note: Sometimes it is impossible to obtain the same inter-row spacing för blocks of blank tape and blocks of all-hole characters when both adjusting screws are set for maximum inter-row spacing. In such case, turn one of the adjusting screws very slightly away from the maximum setting.

6.16 FAULT TRACING

Inter-row spacing stable, but too short

- Adjusting screws 13 and 19 not adjusted for maximum inter-row spacing.
- Feed arm motion too short.
- Feed arm twisted.
- Motor speed too slow.

Inter-row spacing stable, but too long

- Feed arm motion too long.
- Main shaft bearings displaced in bearing shields.
- Feed arm twisted.

Unstable inter-row spacing

- Feed arm 31 bent or twisted.
- Poor contact at lug 27 against brake plate 28.
- Cores in solenoids 14 and 16 out of adjustment or foreign matter in air gaps between feed rocker armature and cores.
- Rear brake plate 24 not parallel with tape pathway.
- Axial play in feed/brake solenoid shaft and ball bearing 18.
- Feed/brake solenoids improperly latched to feed/brake solenoid frame 15.
- Weak motor or main shaft bearings which bind (speed differs when blank tape is punched and when all-hole characters are punched).
- Cracks in spring 30.
- Transmission on main shaft and/or motor shaft is loose.
- Toothed belt incorrectly tensioned or rubbing against something.
- Poor lubrication, particularly at lug 27.
- Reel holder binds, or spring for reel holder is under too little tension thus causing the arm to rise to its top position.
- Aluminium ring on reel holder brake wheel has worked loose.
- Feed/brake solenoid frame improperly pinned to tape pathway so that the feed/brake solenoids fail to contact tape pathway properly at the three contact points.

Punches wrong character

- Punch solenoid cores faulty or improperly adjusted.
- Hammer springs 51 and 52 faulty or improperly adjusted.
- Hammers 54 worn or bent.
- Stop spring 44 faulty or loose in its mounting.
- Punch pins worn.
- Punch pins penetrate too short a distance into die.

Punch unit operates properly when run in test rig, but not when mounted in its enclosure

- The punch unit chassis binds against the enclosure.
- Chad exhaust presses against enclosure.
- Upper cover plates on enclosure press against the tape pathway wherewith it can be pressed out of position.
- Excessive drive belt tension.

7. SPECIAL PUNCH UNIT SERVICE

7.1 REPINNING THE FEED/BRAKE SOLENOID FRAME 15

Tools

Bench drill press
Parallel-jaw clamp
Drill bit, 1.9 mm
Reamer, 2 mm
Hex-key wrench, 3 mm
Guide pins, 2 mm

Check that there is no play between the feed/brake solenoid frame 15 and the feed/brake solenoid housing and that the latch functions properly. See section 6.10 and Fig. 6-24a Fig. 6-24a. Remove the feed/brake solenoid frame. File away the old guide pins in the tape pathway. Remove latch spring E in Fig. 6-24a. Screw up brake adjusting screw 19. Attach the feed/brake solenoid frame loosely with its three retaining screws. Press the feed/brake solenoid frame backwards while simultaneously pressing the feed/brake solenoids against the tape pathway. Looking against a light, check that the feed/brake solenoids rest on the three contact points I, J and K in Fig. 6-24b Fig. 6-24b. First tighten the centre screw lightly and then the other two. Adjust the feed/brake solenoid frame mounting until proper contact is established with all three contact points. Then tighten the three screws firmly, taking up on them alternately. Secure the tape pathway with the parallel-jaw clamp. Carefully make two centre punch marks in the frame. Check the contact at the three contact points again.

Drill with a 1.9 mm bit.

Unscrew the feed/brake solenoid frame.

Insert the guide pins. They shall project 1.5 - 2 mm from the tape pathway. Ream the solenoid frame from the side that contacts the tape pathway using a 2 mm reamer.

Secure the solenoid frame with latch.

Check that it contacts the tape pathway correctly in accordance with section 6.10.

7.2 FITTING FEED ROCKER 17

Press out the old feed rocker using a column-type drill press or the like.

Clean the hole well.

Use a column-type drill press to carefully press the feed rocker into the feed/brake solenoid housing far enough so that the brake adjusting screw 19 is directly opposite the hole for brake plate 24.

When the feed rocker is properly fitted and without faults, there shall be virtually no play between ball bearing and bearing housing, and the feed rocker armature shall flip over easily under its own weight.

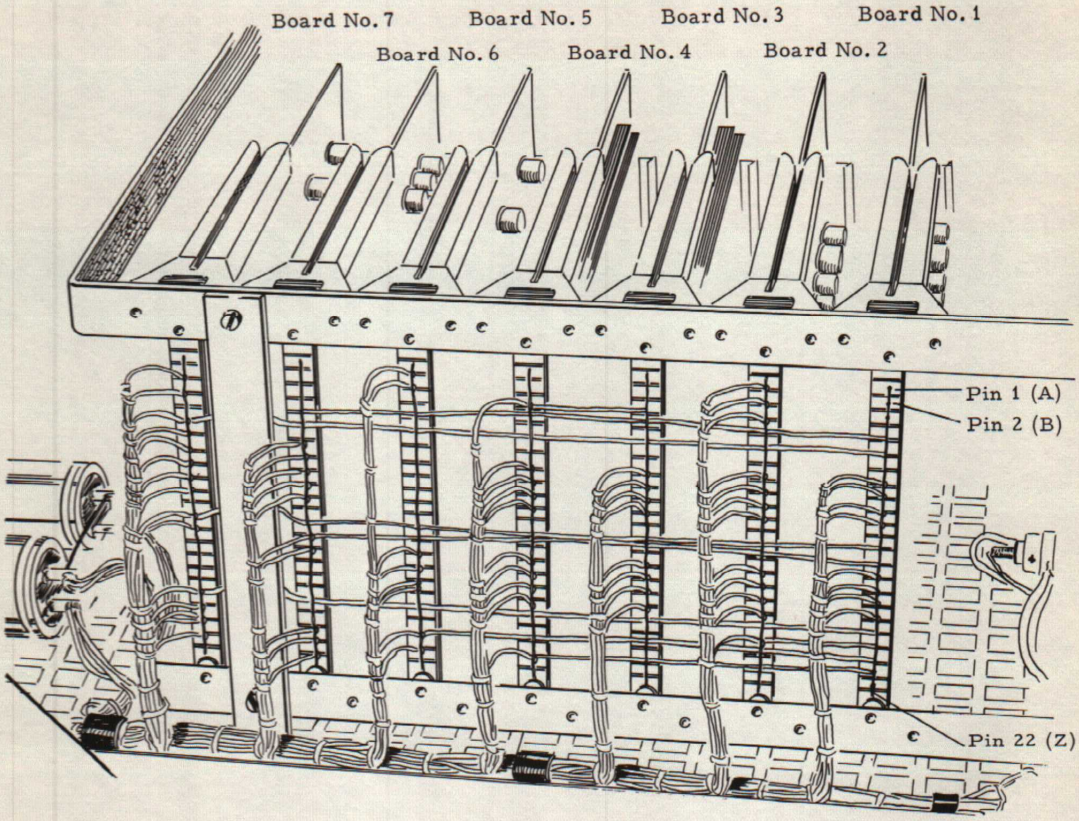

Fig. 8-1 Pin designations on circuit board connectors

8. CONTROL UNIT SERVICE

The control unit logic diagram appears in Appendix 3. On this diagram the circuit boards are represented by chain-line rectangles. Appendices 4 through 8 show the circuit diagrams for these circuit boards. The positions of the circuit boards are shown in Fig. 3-2. A circuit diagram of the power supply is shown in Appendix 9. Power supply components are shown in Fig. 3-3.

The interconnection diagram appears in Appendix 10. The interconnection diagram makes use of a system of addresses comprising an upper case letter, a number and one or more lower case letters. By way of example, let us find address T2b. First find upper case letter T (upper right hand corner). Follow the vertical line down and then to the left looking for number 2. When you find number 2, look for the letter b. Now, how can you tell where this line came from? Below the b you will see the designations N2 and H1. Find H1 in the same way that you just found T2. Look there for the letter b. Now find N2 and look there for the letter b. This system is used throughout the diagram.

Fig. 8-1

The pin designations on the circuit board connectors are shown in Fig. 8-1. These pin designations re-appear a) on the circuit board section of the interconnection diagram and b) in circles at the edges of the circuit diagrams in the Appendices.

To service the control unit connect it up via a variable autotransformer and adjust to provide the rated mains voltage (see nameplate).

Pulses can either be checked at the cable harnesses which connect the printed circuit boards in the control unit or on the circuit boards themselves using an extension circuit board.

When tracing faults in the control unit alone, refer to the description of control unit operation presented in chapter 5. When tracing faults in the control unit and punch unit together, refer also to the description of punch unit operation in chapter 4 and to pertinent sections of chapter 6.

The most important pulse waveforms are shown below.

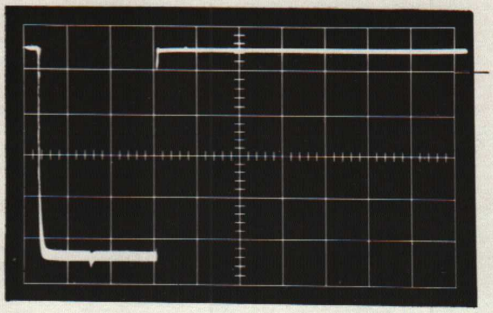

Pulse: IP
Monitoring point: 5-15
Scale: 2V/cm 20 µs/cm
Trigger: Start pulse
Connected to point: 5-14 ext. -

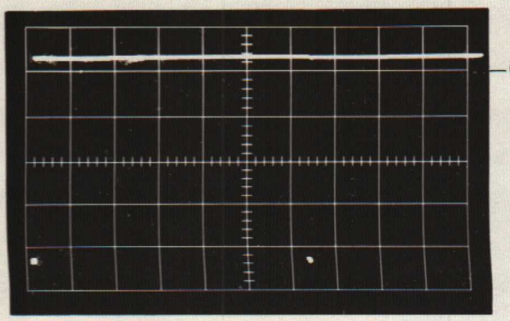

Pulse: Ready signal (continous punching)
Monitoring point: 5-16
Scale: 2V/cm 1 ms/cm
Trigger: Start pulse
Connected to point: 5-14 ext. -

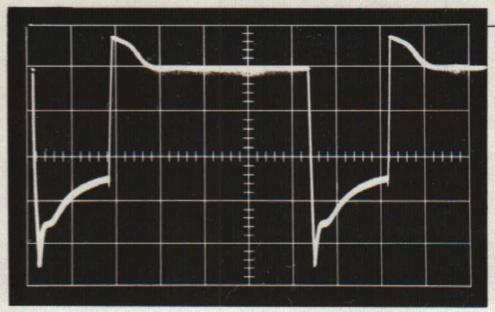

Pulse: To punch solenoid
Monitoring point: 3-9
Scale: 5V/cm 1 ms/cm
Trigger: Start pulse
Connected to point: 5-14 ext. -

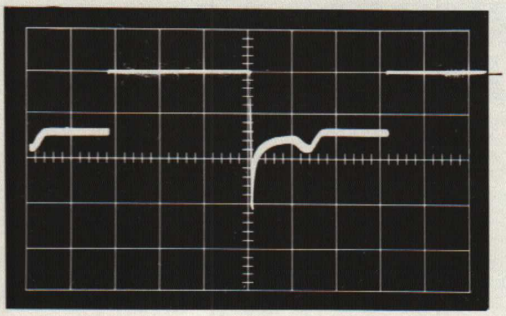

Pulse: To feed solenoid
Monitoring point: 7-20
Scale: 10V/cm 1 ms/cm
Trigger: Start pulse
Connected to point: 5-14 ext. -

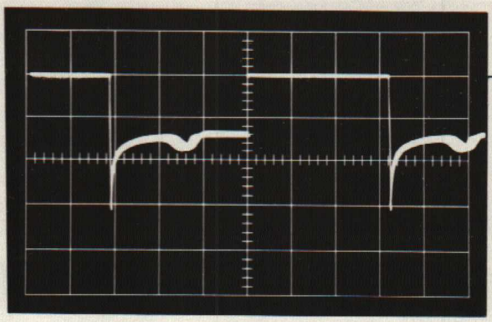

Pulse: To brake solenoid
Monitoring point: 7-6
Scale: 10V/cm 1 ms/cm
Trigger: Start pulse
Connected to point: 5-14 ext. -

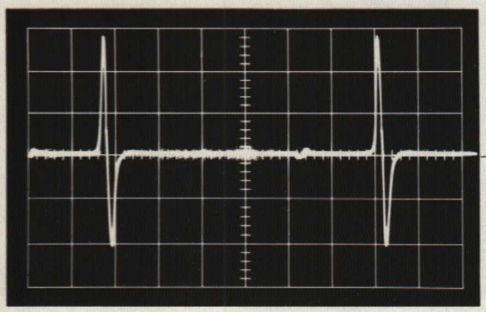

Pulse: G-start
Monitoring point: 6-22
Scale: 5V/cm 1 ms/cm
Trigger: Start pulse
Connected to point: 5-14 ext.-

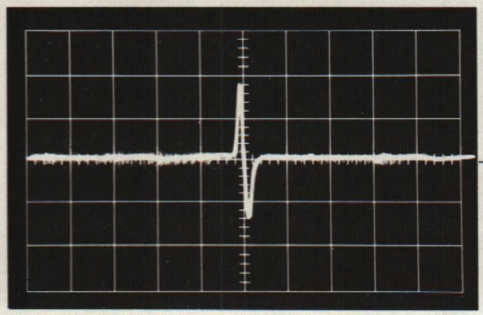

Pulse: G-stop
Monitoring point: 6-21
Scale: 5V/cm 1 ms/cm
Trigger: Start pulse
Connected to point: 5-14 ext.-

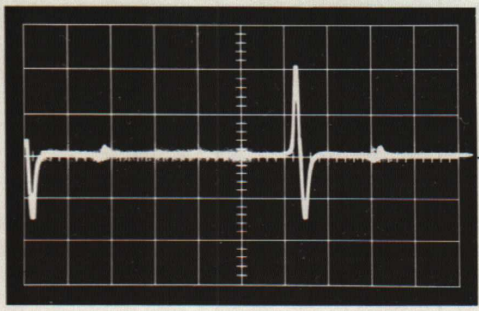

Pulse: G-ready
Monitoring point: 6-20
Scale: 5V/cm 1 ms/cm
Trigger: Start pulse
Connected to point: 5-14 ext.-

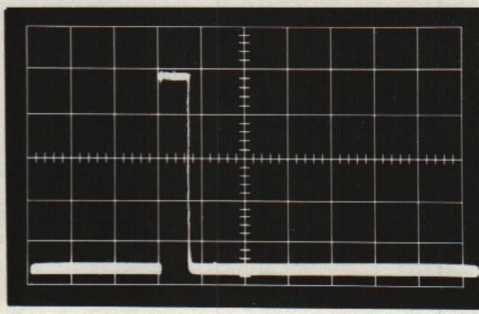

Pulse: NP
Monitoring point: 6-4
Scale: 2V/cm 50 µs/cm
Trigger: G-ready
Connected to point: 6-20 ext. +

1 Connecting rod spring
2 Guillotine frame
3 Lubrication tube
4 Connecting rod crossarm
5 Guillotine
6 Lower limit screw
7 Rear beam
8 Hammer shaft
9 Lubrication tube
10 Upper punch solenoid
11 Lower punch solenoid
12 Lubrication tube
13 Feed adjusting screw
14 Feed solenoid
15 Feed brake solenoid frame
16 Brake solenoid
17 Feed rocker
18 Ball bearing
19 Brake adjusting screw
20 Guide plate screw
21 Rear tape guide plate
22 Leaf spring
23 Tape pathway screw
24 Brake plate (rear)
25 Tape pathway
26 Spring
27 Lug
28 Brake plate (front)
29 Feed arm adjustment screw
30 Connecting rod spring
31 Feed arm
32 G-ready arm
33 G-stop arm
34 G-start arm
35 G-stop coils
36 G-ready coils
37 G-start coils
38 Feed arm spring
39 Main shaft
40 Connecting rod
41 Die
42 Punch pin
43 Feed hole punch pin
44 Stop spring
45 Connecting rod
46 Oil shut-off valve
47 Washer
48 Belt pulley
49 Toothed belt
50 Stop spring support
51 Hammer spring (rear)
52 Hammer spring (front)
53 Punch solenoid holder
54 Hammer
55 Beam retaining screw
56 Hammer cushion
57 Front beam
58 Upper limit screw

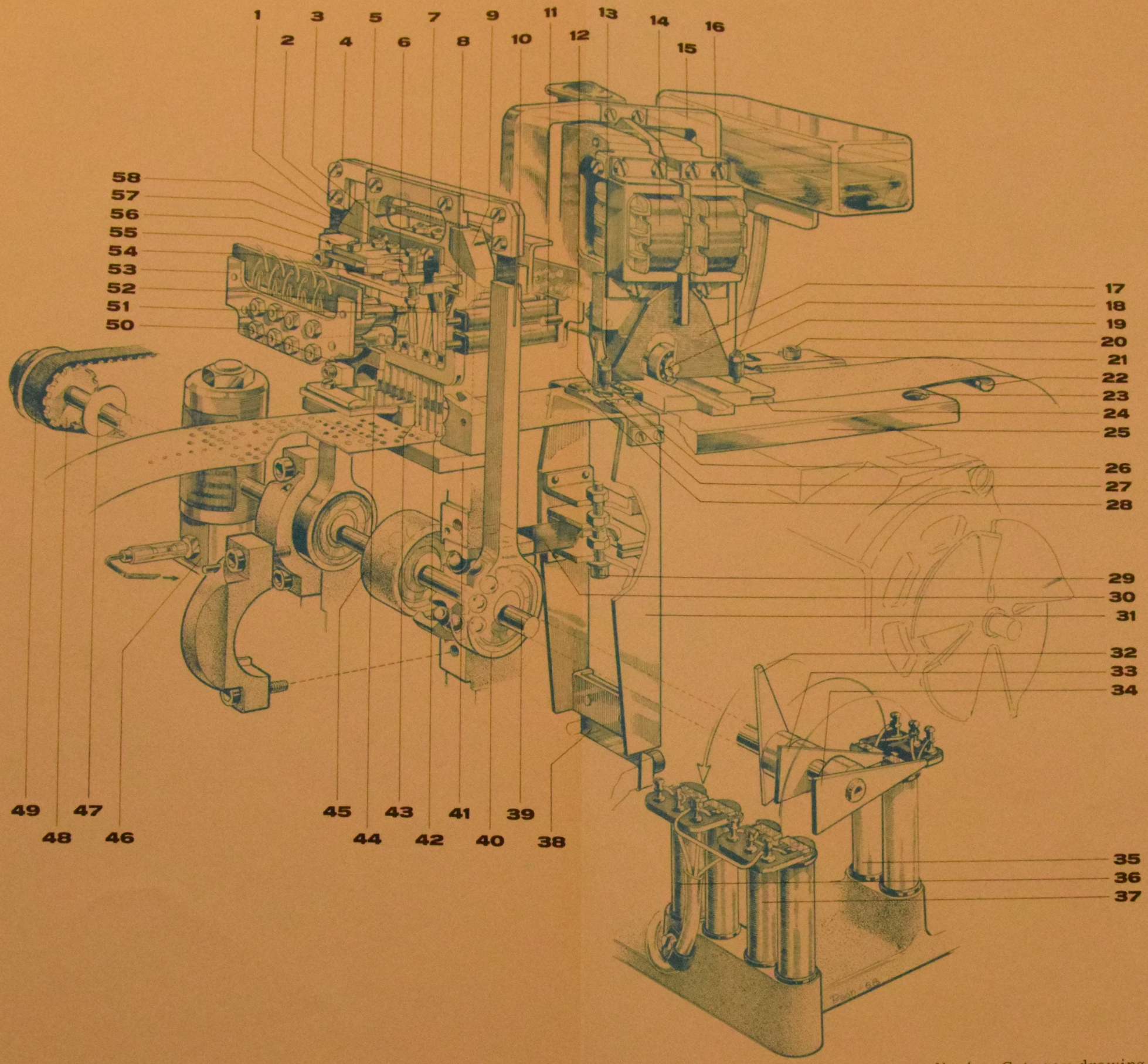

Appendix 1 Cutaway drawing

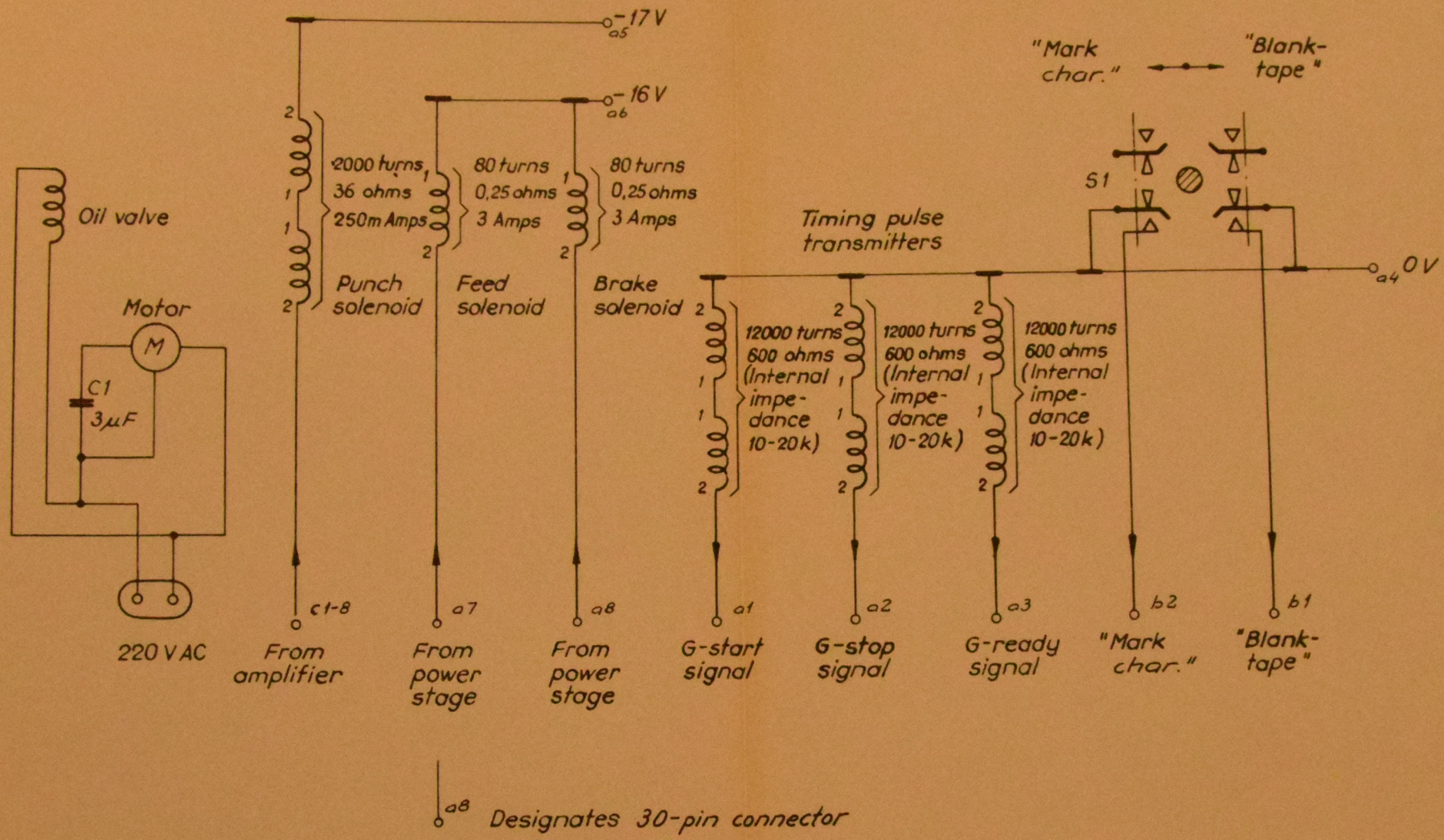
-17 V
a5
-16 V
a6
2000 turns
36 ohms
250m Amps
80 turns
0,25 ohms
3 Amps
80 turns
0,25 ohms
3 Amps
Punch solenoid
Feed solenoid
Brake solenoid
Oil valve
Motor
M
C1
3µF
220 V AC
c1-8
From amplifier
a7
From power stage
a8
From power stage
"Mark char."
"Blank-tape"
S1
Timing pulse transmitters
a4
0 V
12000 turns
600 ohms
(Internal impe-dance 10-20k)
12000 turns
600 ohms
(Internal impe-dance 10-20k)
12000 turns
600 ohms
(Internal impe-dance 10-20k)
a1
G-start signal
a2
G-stop signal
a3
G-ready signal
b2
"Mark char."
b1
"Blank-tape"
a8
Designates 30-pin connector

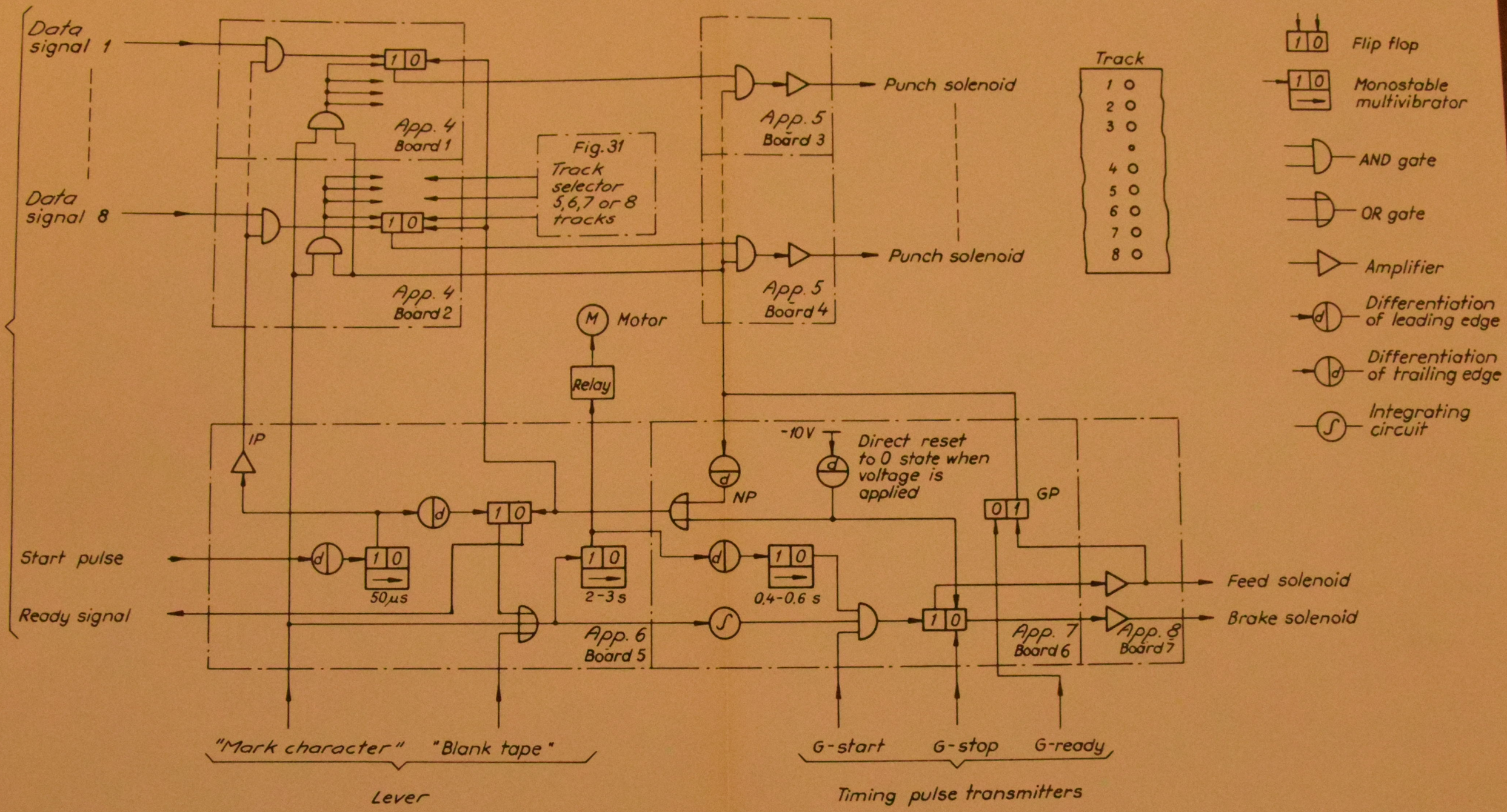

Appendix 3 Control unit logic diagram

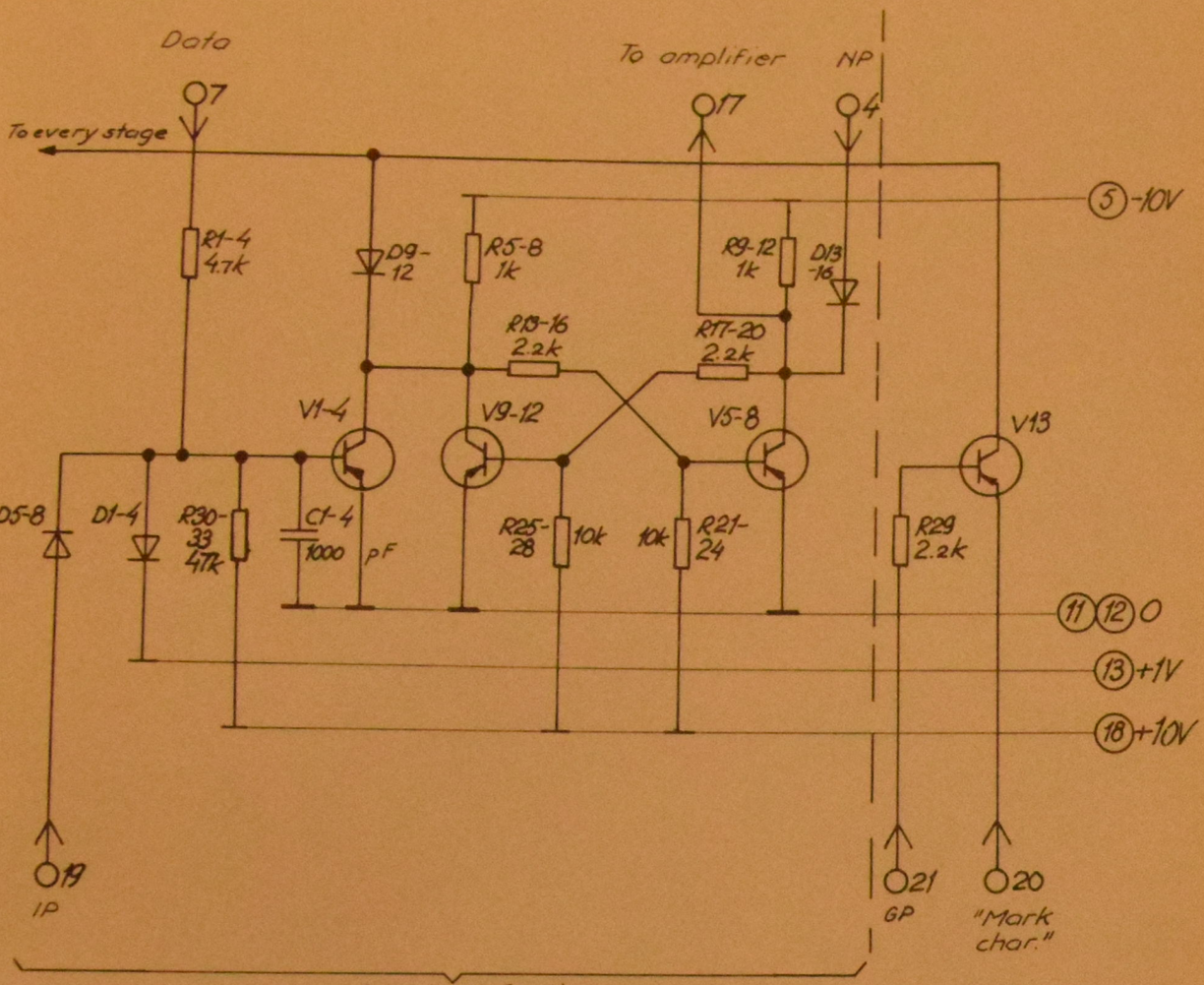

Corresponding points in the various stages			
Stage			
1	2	3	4
7	8	9	10
4	4	4	4
19	19	19	19
17	16	15	14

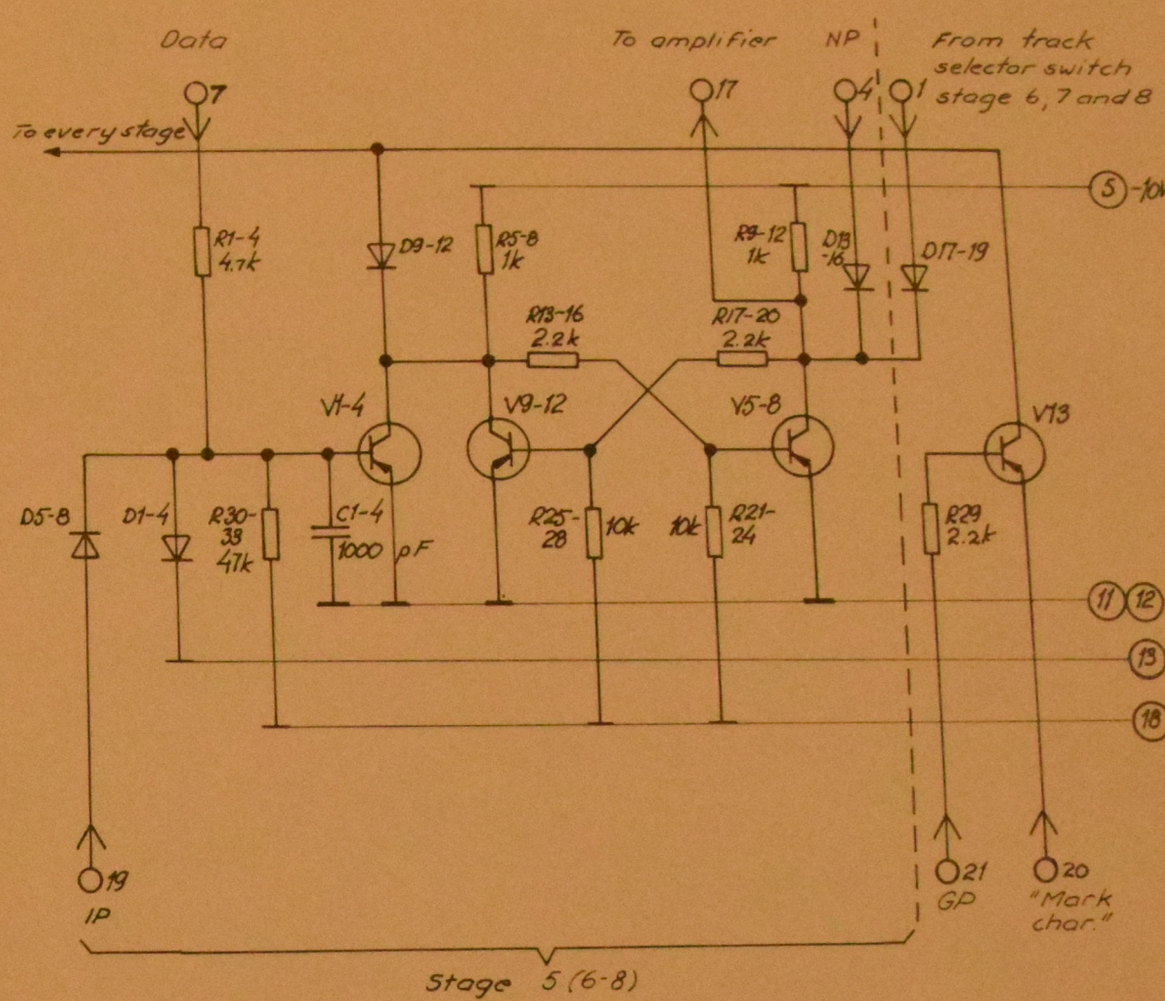

Corresponding points in the various stages			
Stage			
5	6	7	8
7	8	9	10
4	4	4	4
—	3	2	1
19	19	19	19
17	16	15	14

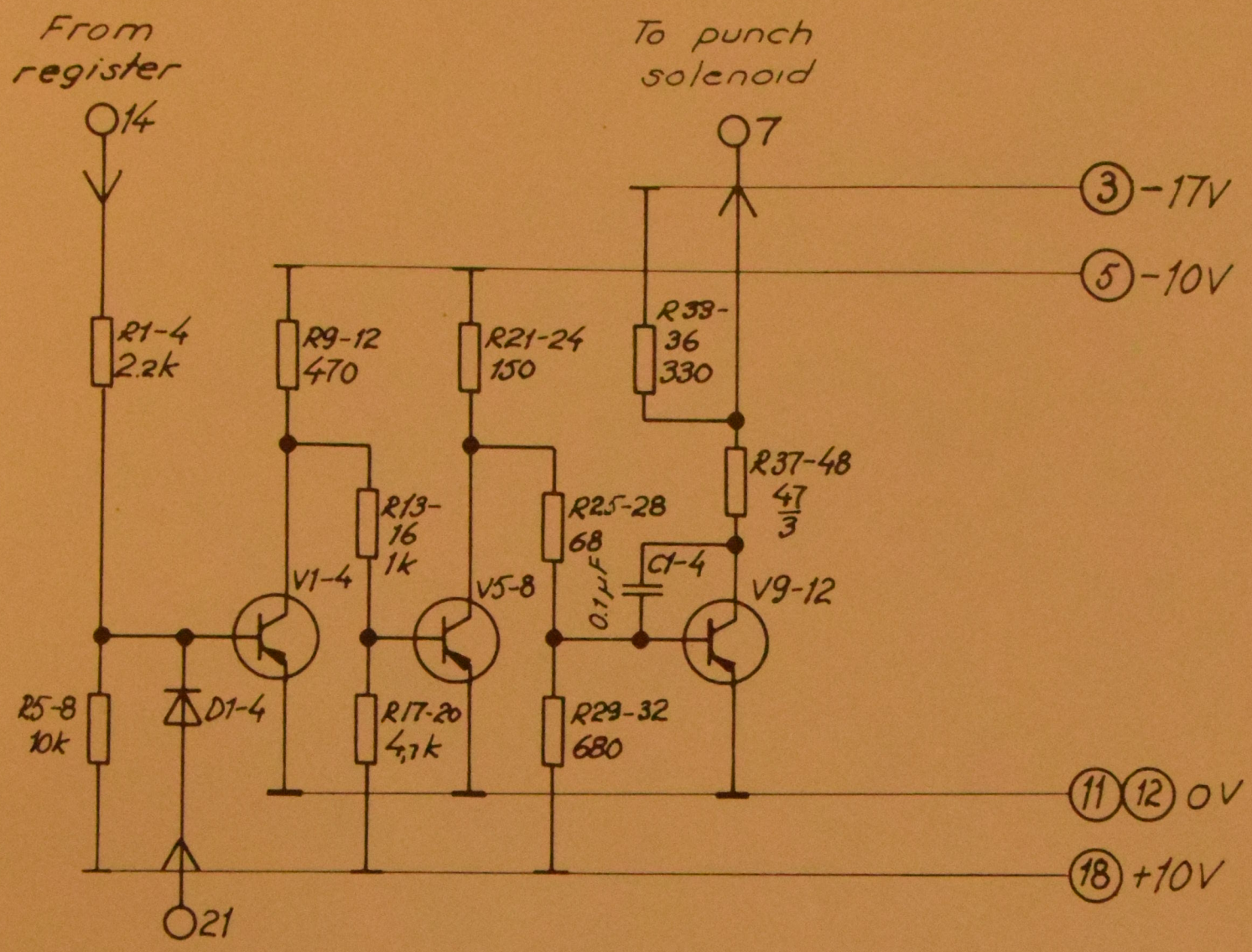

Stage 1 (2-8)

Corresponding points in the various stages							
Stage							
1	2	3	4	5	6	7	8
7	8	9	10	7	8	9	10
14	15	16	17	14	15	16	17
				21	21	21	21
21	21	21	21				

Stage 1-4 on board No. 3
Stage 5-8 on board No. 4

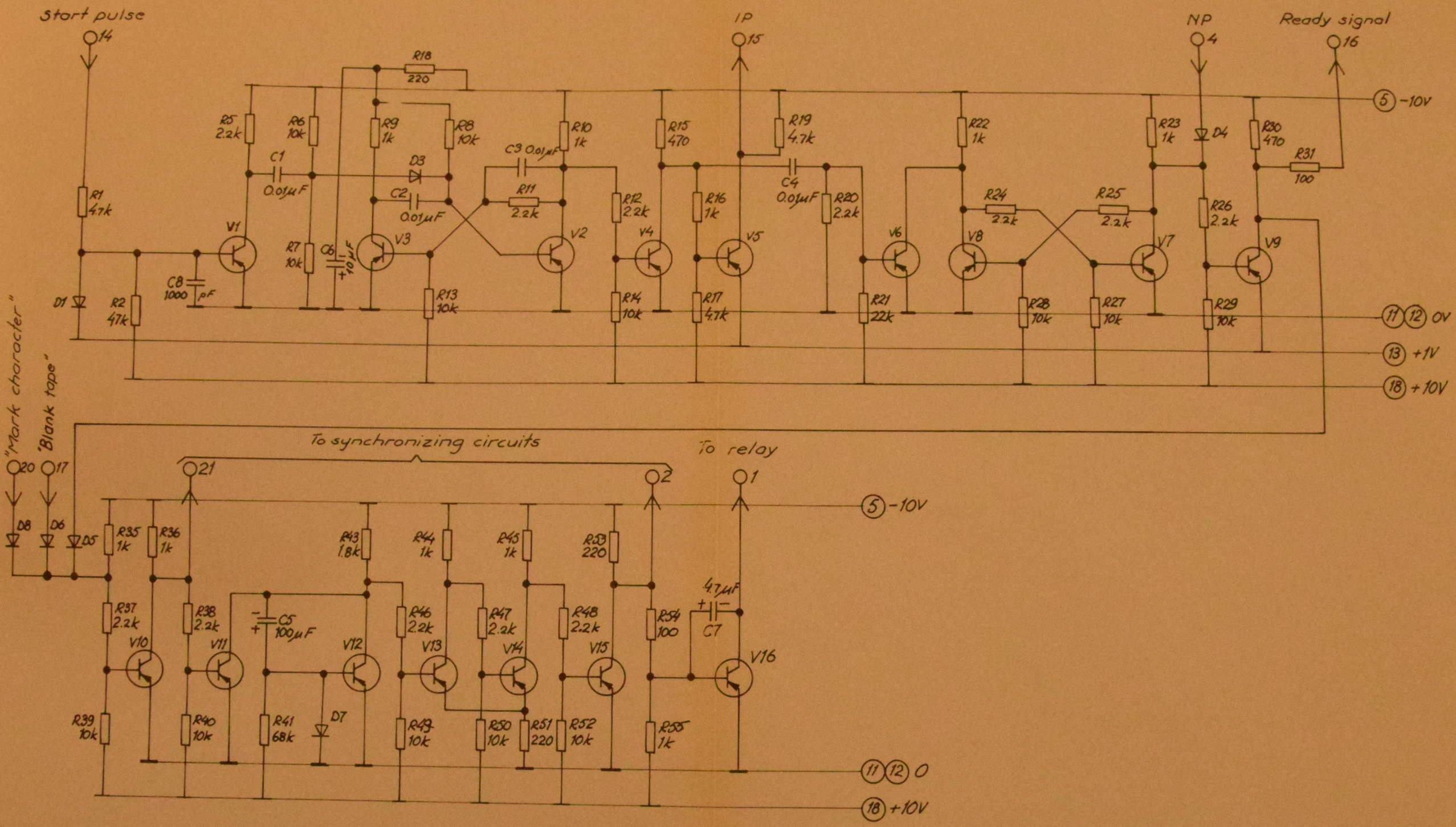
Start pulse
14
IP
15
NP
4
Ready signal
16
R18
220
R5 2.2k
R6 10k
R9 1k
R8 10k
C1 0.01µF
D3
C2 0.01µF
C3 0.01µF
R10 1k
R11 2.2k
R15 470
R19 4.7k
C4 0.01µF
R22 1k
R23 1k
D4
R30 470
R31 100
R1 4.7k
V1
V2
V3
V4
V5
V6
V7
V8
V9
R7 10k
C6 10µF
R12 2.2k
R16 1k
R20 2.2k
R24 2.2k
R25 2.2k
R26 2.2k
C8 1000 pF
D1
R2 47k
R13 10k
R14 10k
R17 4.7k
R21 22k
R28 10k
R27 10k
R29 10k
5 -10V
11 12 0V
13 +1V
18 +10V
"Mark character"
"Blank tape"
20
17
To synchronizing circuits
21
To relay
2
1
D8
D6
D5
R35 1k
R36 1k
R43 1.8k
R44 1k
R45 1k
R53 220
R37 2.2k
R38 2.2k
C5 100µF
R46 2.2k
R47 2.2k
R48 2.2k
R54 100
47µF
C7
V10
V11
V12
V13
V14
V15
V16
R39 10k
R40 10k
R41 68k
D7
R49 10k
R50 10k
R51 220
R52 10k
R55 1k
5 -10V
11 12 0
18 +10V

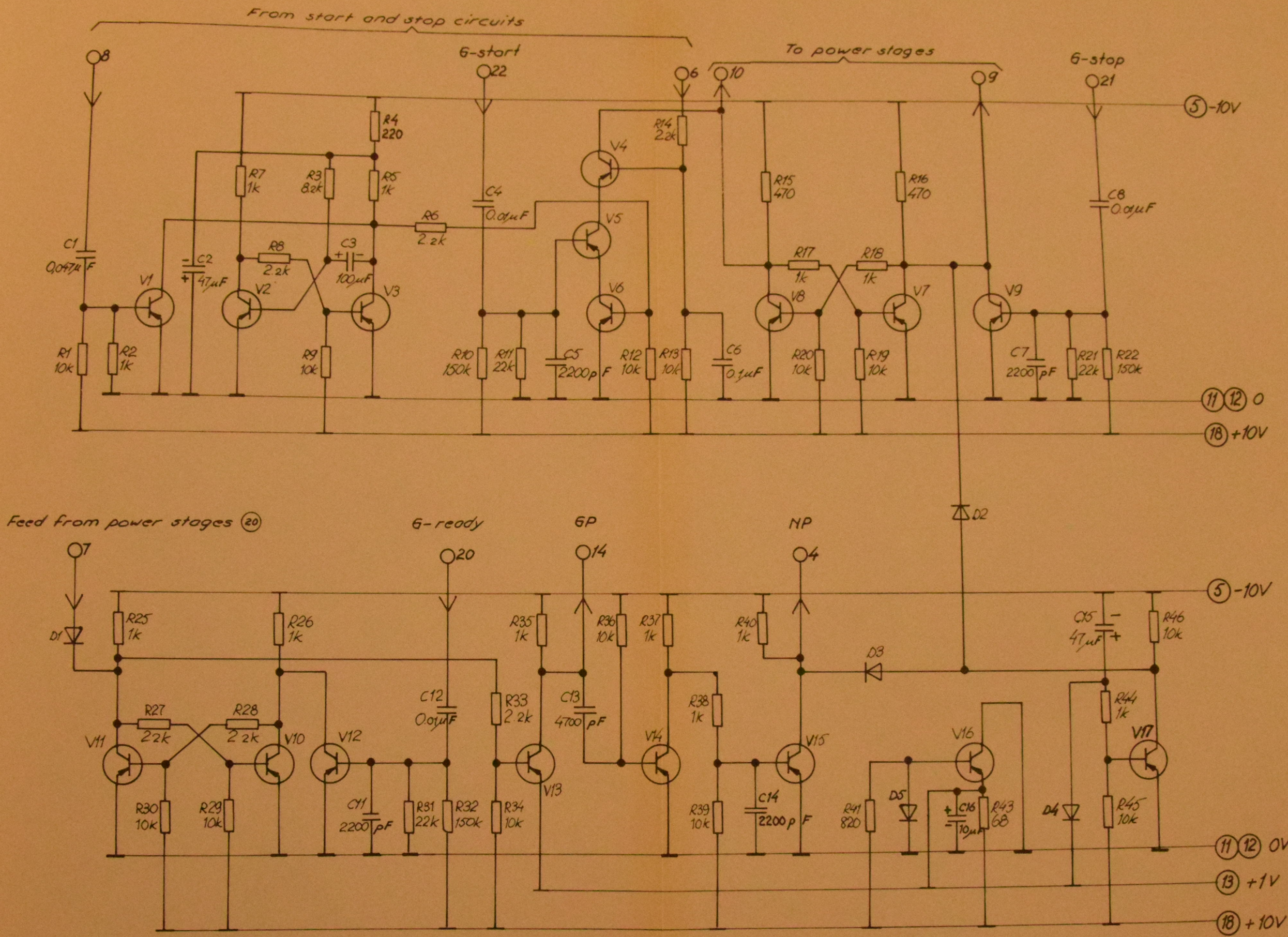

Appendix 7 Circuit diagram Board No. 6

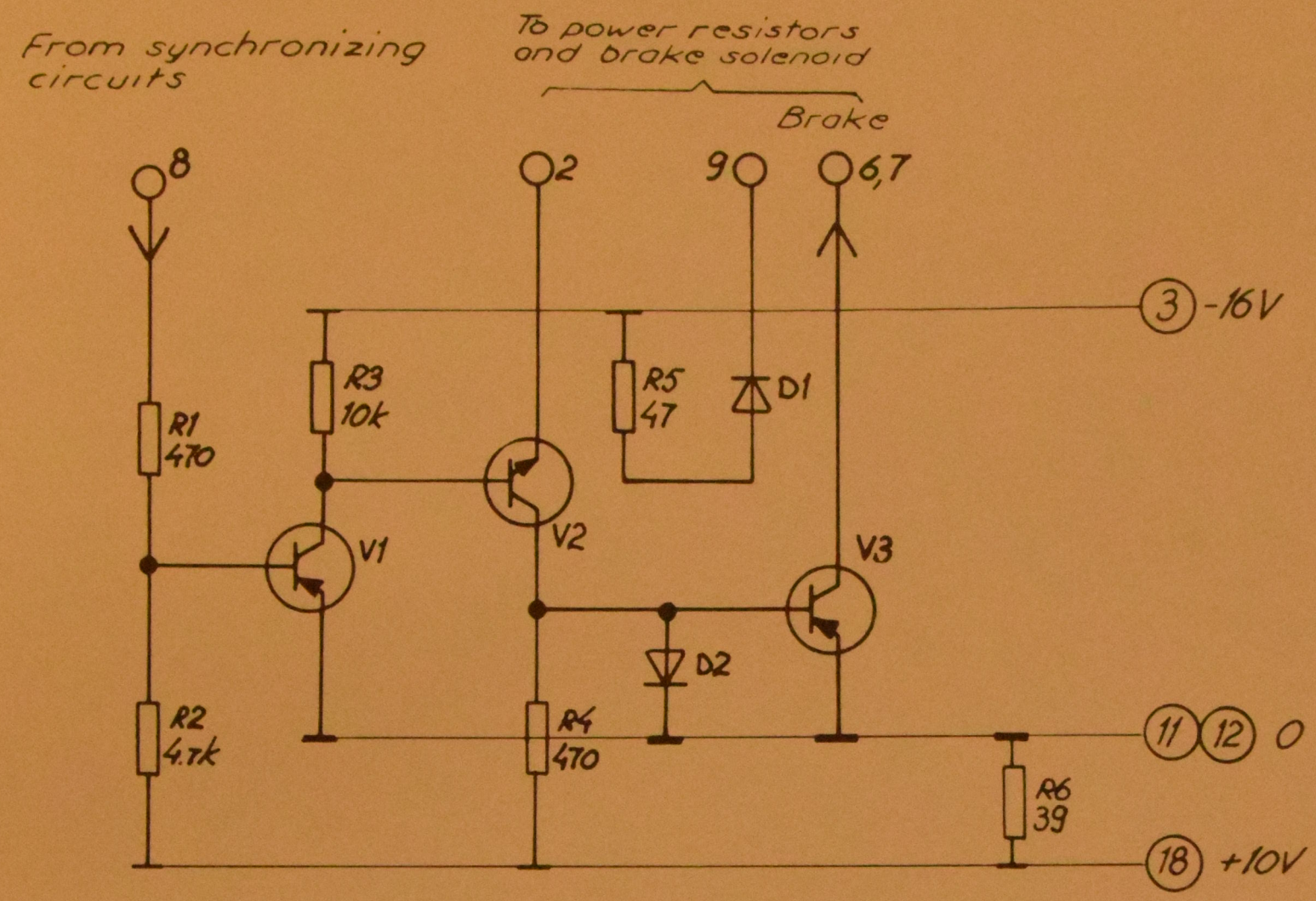

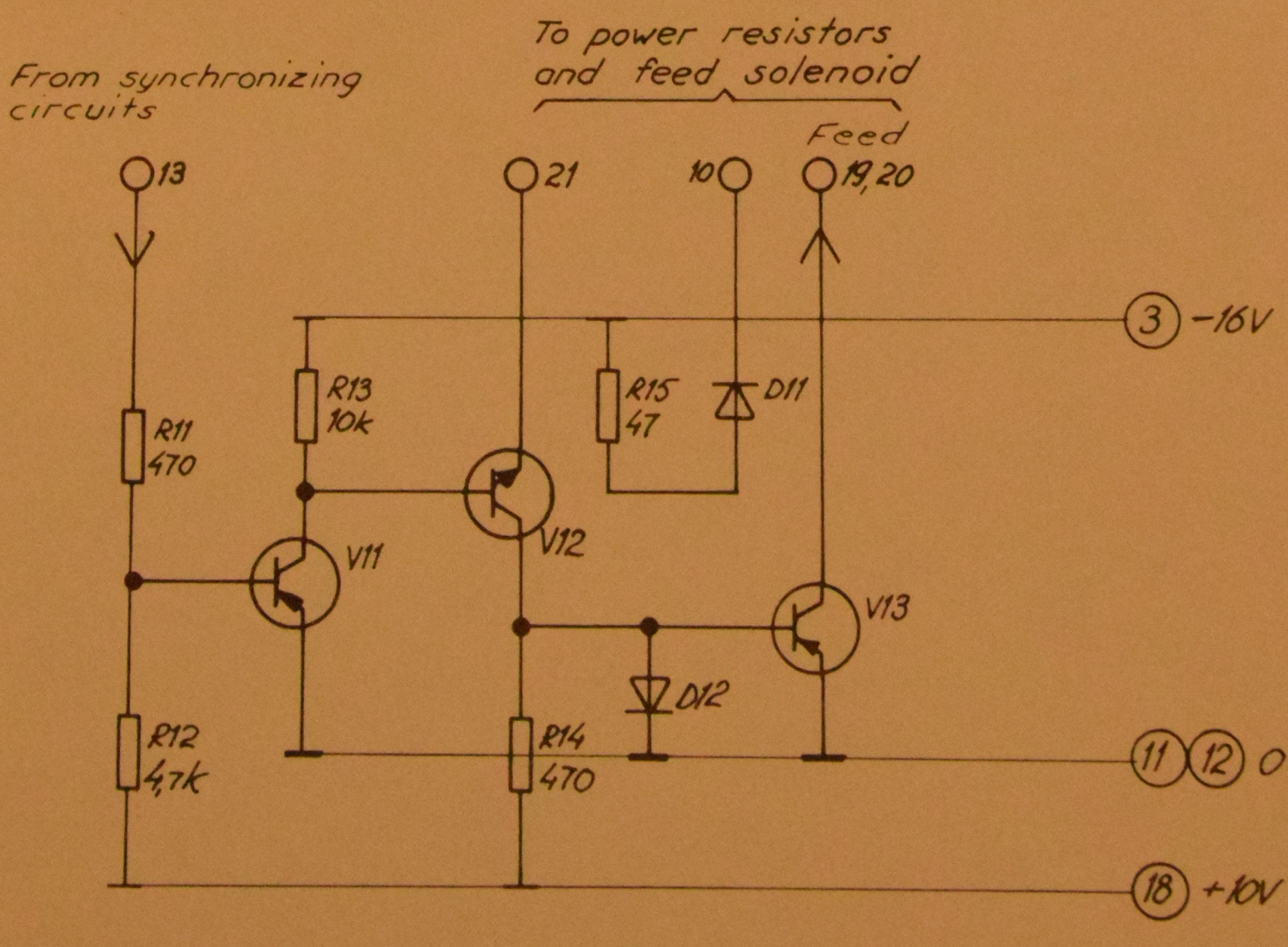

Appendix 8 Circuit diagram Board No. 7

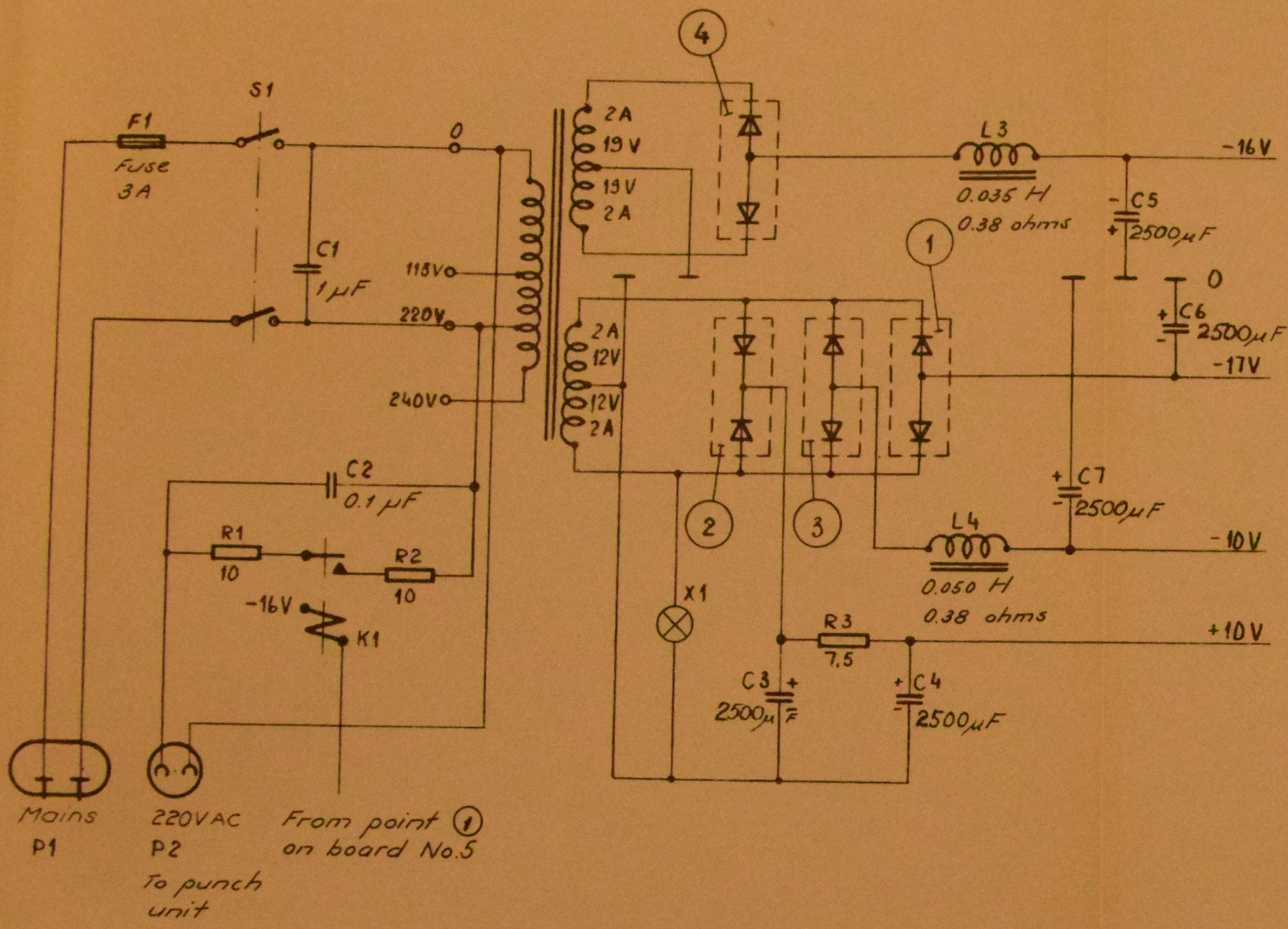

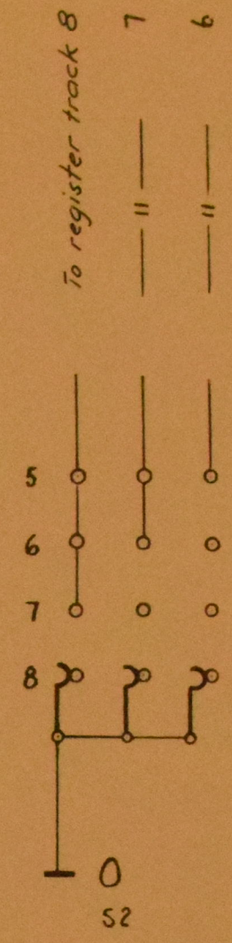

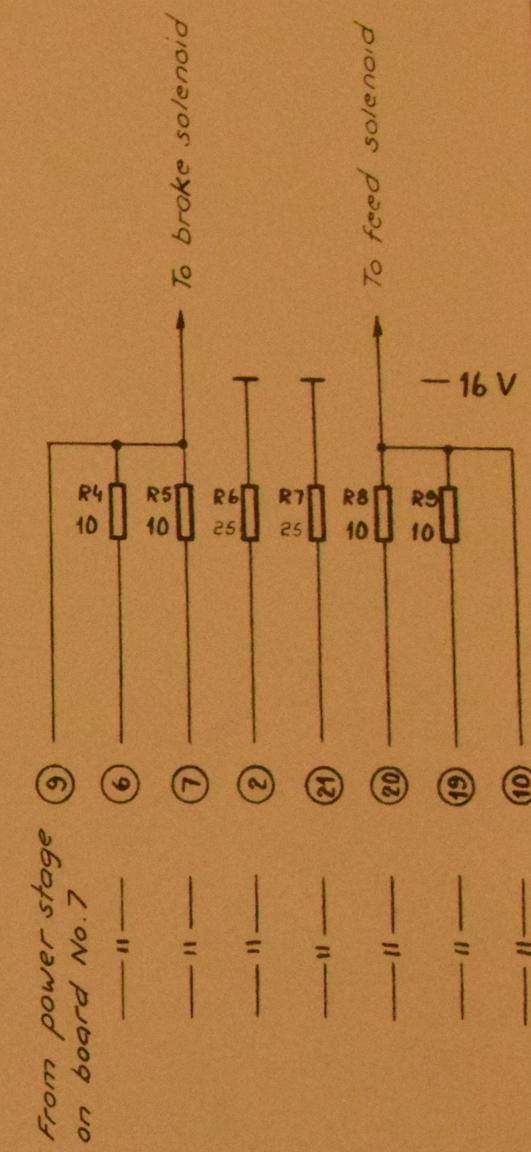

Appendix 9 Circuit diagram power supply.
Track selector switch

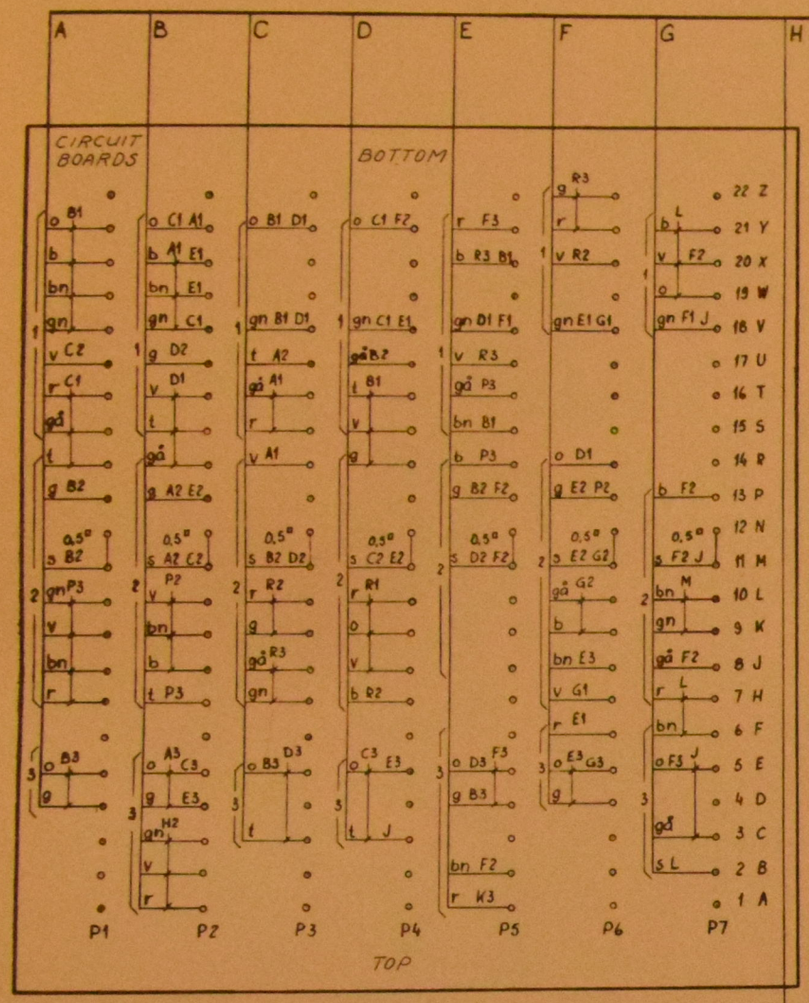

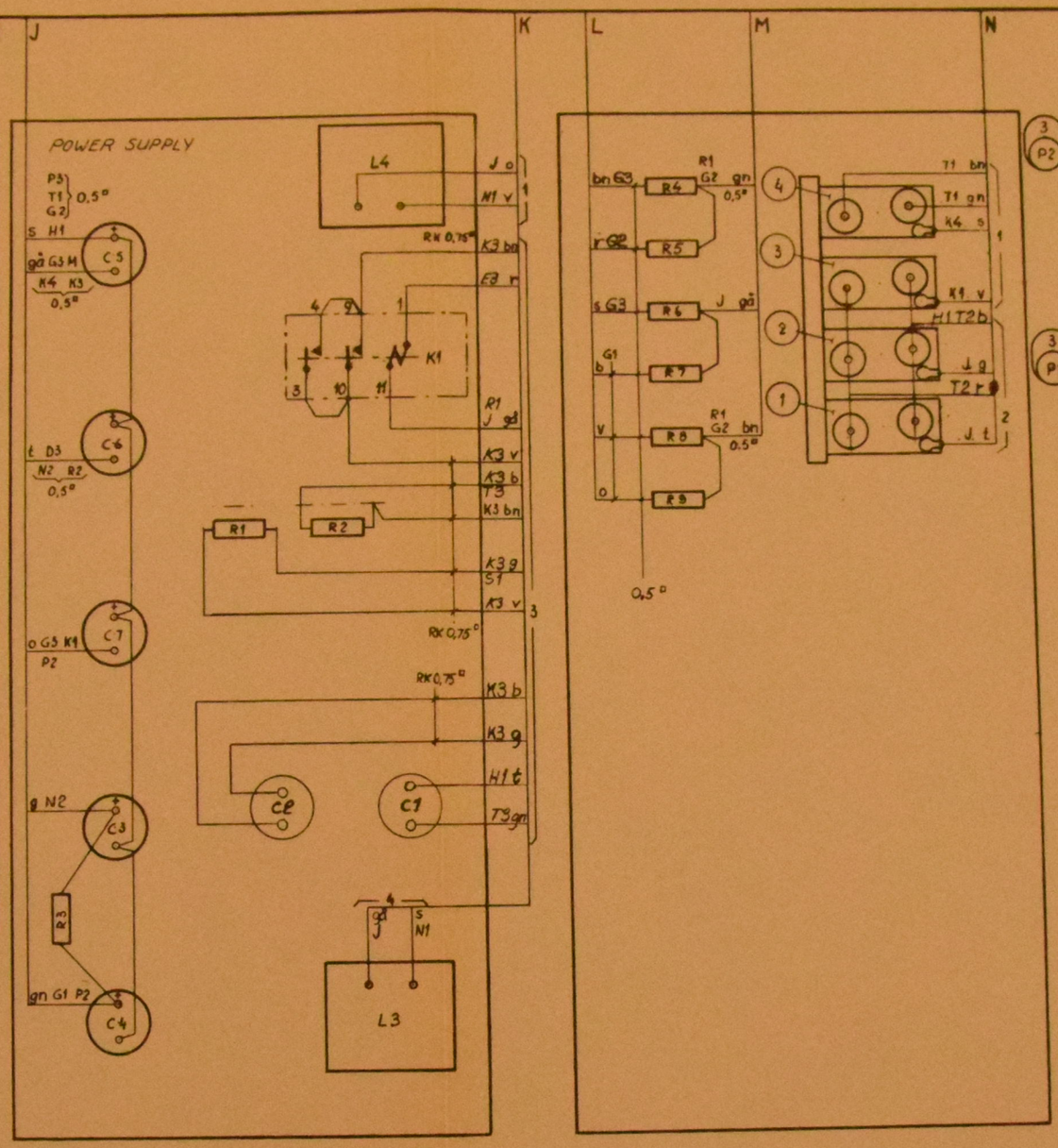

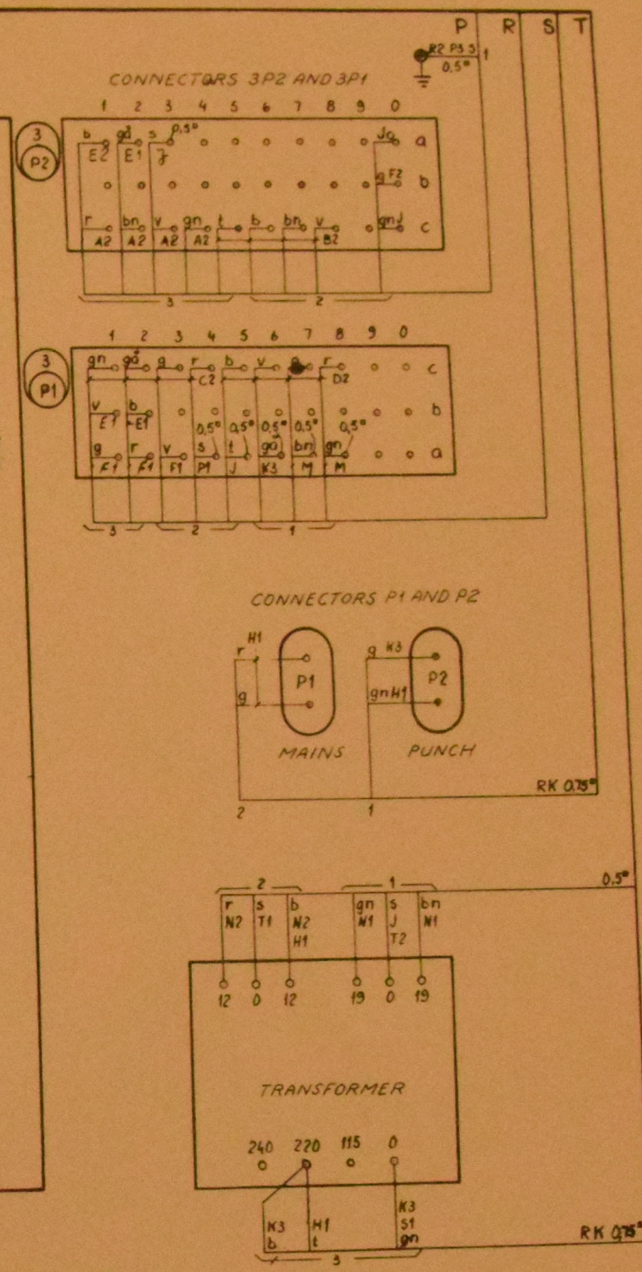

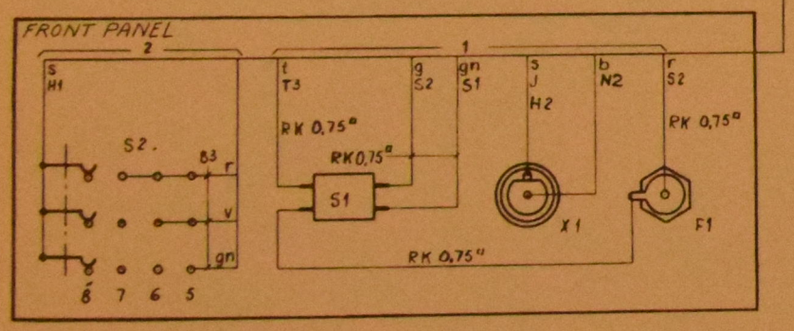

Appendix 10 Interconnection diagram

GENERAL

This spare parts list contains a complete set of spare parts for the Facit 4060, Facit 4061 and Facit 4063 punch units. Sub-units and associated parts are grouped together in the part list.

Numbers of complete sub-units are shown in boxes 15.00558.00.3

The column headed "Old No." in the cross-indexed list contains designations for parts and dimension designations for screws, nuts, washers and taper pins. These latter are designated in accordance with the system used in the spare parts list for the Facit PE 1500 tape punch (UGB 650605).

These designations should be used only to identify the new ten-digit part numbers; they are not to be used when ordering spare parts.

It is important to include the model type designation on every spare part order. In order to facilitate and expedite the handling of spare part orders, they shall be made out in duplicate and preferably on special forms. These forms can be obtained free of charge from us on request. In conjunction with orders for spare parts covered by gurantee the defective parts shall be returned to the factory, giving the serial No. of the machine concerned.

Kindly address your orders for spare parts to:

Facit AB
Export Department
Fack

S-10380 STOCKHOLM
Sweden

SECTION II

TABLE OF CONTENTS

1 CASE, COVER AND TAPE SUPPLY REEL
2 BODY, ELECTRICAL COMPONENTS AND LUBRICATION SYSTEM
3 TAPE GUIDE PLATES
4 TAPE FEED MECHANISM
5 MAIN SHAFT AND FEED ARM
6 PUNCH MECHANISM
7 ACCESSORIES

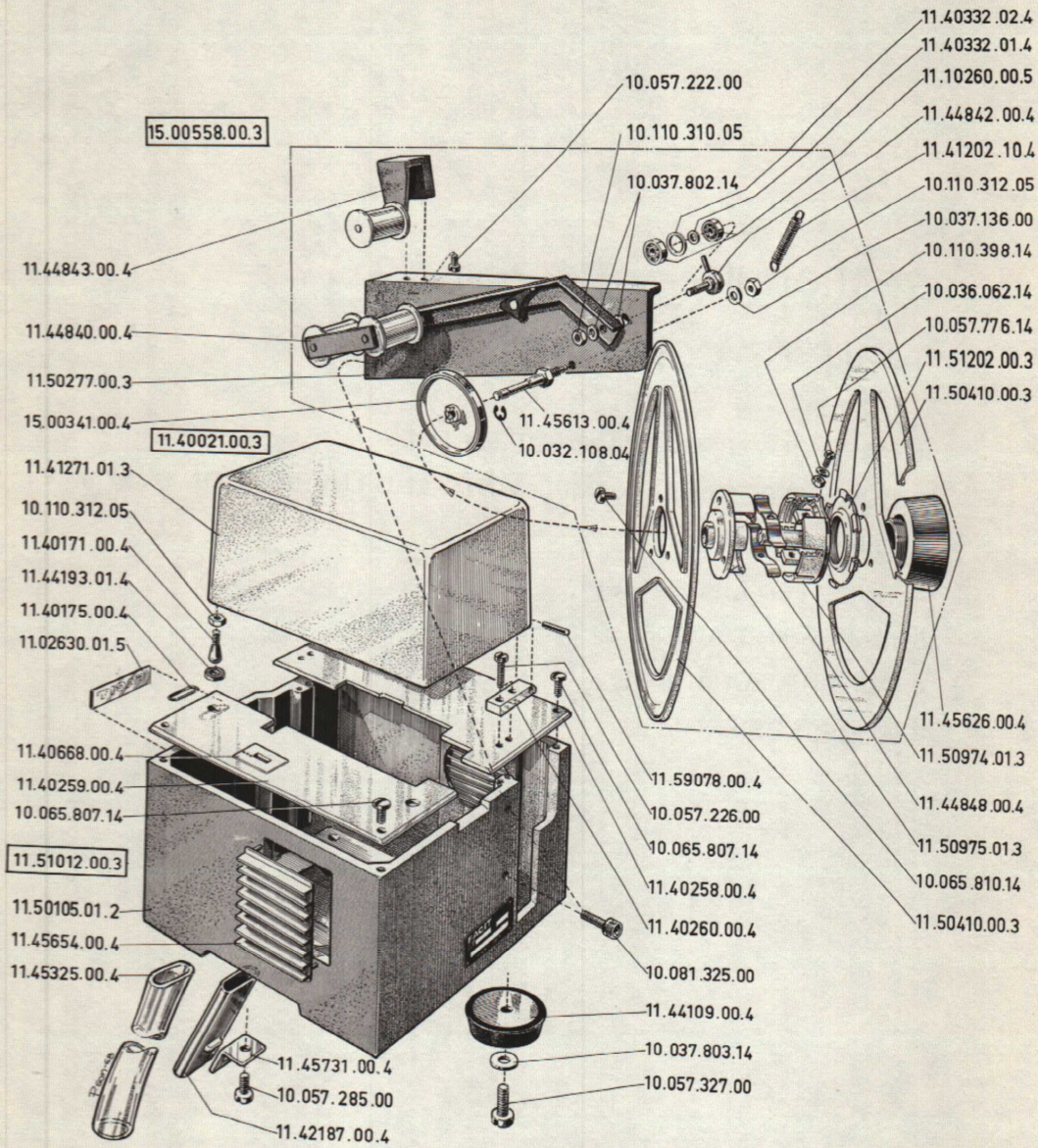
11.40332.02.4
11.40332.01.4
11.10260.00.5
11.44842.00.4
11.41202.10.4
10.110.312.05
10.037.136.00
10.110.398.14
10.036.062.14
10.057.776.14
11.51202.00.3
11.50410.00.3
10.057.222.00
10.110.310.05
10.037.802.14
15.00558.00.3
11.44843.00.4
11.44840.00.4
11.50277.00.3
15.00341.00.4
11.40021.00.3
11.45613.00.4
10.032.108.04
11.41271.01.3
10.110.312.05
11.40171.00.4
11.44193.01.4
11.40175.00.4
11.02630.01.5
11.40668.00.4
11.40259.00.4
10.065.807.14
11.51012.00.3
11.50105.01.2
11.45654.00.4
11.45325.00.4
11.45731.00.4
10.057.285.00
11.42187.00.4
11.59078.00.4
10.057.226.00
10.065.807.14
11.40258.00.4
11.40260.00.4
10.081.325.00
11.44109.00.4
10.037.803.14
10.057.327.00
11.45626.00.4
11.50974.01.3
11.44848.00.4
11.50975.01.3
10.065.810.14
11.50410.00.3

1

CASE, COVER AND TAPE SUPPLY REEL

Part No.	Description	Qty
11.51012.00.3	Case complete, without cover plates	1
11.50105.01.2	Case	1
11.45654.00.4	Protective grid	2
11.02630.01.5	Facit sign	1
11.42187.00.4	Flexible-tube holder	1
11.45731.00.4	Angle bracket	1
10.057.285.00	Screw	1
11.44109.00.4	Shock absorber	4
10.037.803.14	Washer	4
10.057.327.00	Screw	4
11.45325.00.4	Chad exhaust tube	1
11.40258.00.4	Cover plate	1
11.40259.00.4	Cover plate	1
10.065.807.14	Screw	4
11.40260.00.4	Hinge	2
10.057.226.00	Screw	4
11.40668.00.4	Sign plate	1
11.40175.00.4	Spring	1
11.40021.00.3	Cover complete	1
11.41271.01.3	Cover	1
11.59078.00.4	Pin	2
10.110.312.05	Nut	2
11.40171.00.4	Pin	2
11.44193.01.4	Washer	2
15.00558.00.3	Tape supply complete (Parts within dotted lines.)	1
11.51203.00.3	Flange with knob and grip ring	1
11.50371.00.3	Hub complete with inner flange	1

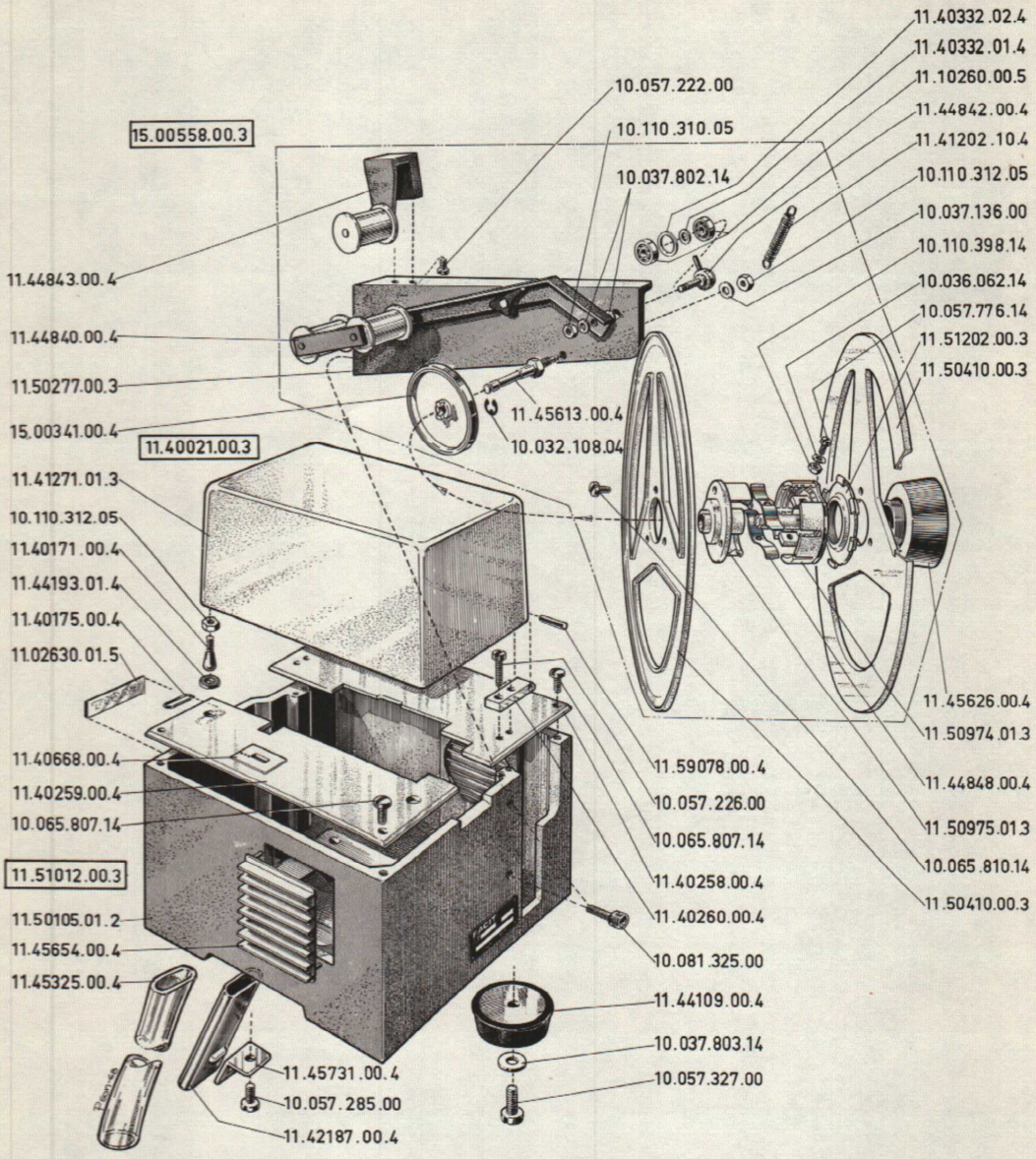
15.00558.00.3
11.44843.00.4
11.44840.00.4
11.50277.00.3
15.00341.00.4
11.40021.00.3
11.41271.01.3
10.110.312.05
11.40171.00.4
11.44193.01.4
11.40175.00.4
11.02630.01.5
11.40668.00.4
11.40259.00.4
10.065.807.14
11.51012.00.3
11.50105.01.2
11.45654.00.4
11.45325.00.4
Plenta
11.45731.00.4
10.057.285.00
11.42187.00.4
10.057.222.00
10.110.310.05
10.037.802.14
11.45613.00.4
10.032.108.04
11.40332.02.4
11.40332.01.4
11.10260.00.5
11.44842.00.4
11.41202.10.4
10.110.312.05
10.037.136.00
10.110.398.14
10.036.062.14
10.057.776.14
11.51202.00.3
11.50410.00.3
11.45626.00.4
11.50974.01.3
11.44848.00.4
11.50975.01.3
10.065.810.14
11.50410.00.3
11.59078.00.4
10.057.226.00
10.065.807.14
11.40258.00.4
11.40260.00.4
10.081.325.00
11.44109.00.4
10.037.803.14
10.057.327.00

Part No.	Description	Qty
11.50975.01.3	Hub	1
11.50974.01.3	Holder	1
11.44848.00.4	Leaf spring	2
10.057.776.14	Screw	2
10.036.062.14	Washer	2
10.110.398.14	Nut	2
10.065.810.14	Screw	3
11.50410.00.3	Flange	1
11.51202.00.3	Grip ring	1
11.45626.00.4	Knob	1
11.50410.00.3	Flange	1
10.065.810.14	Screw	3
11.50277.00.3	Beam	1
10.081.325.00	Screw	2
11.44843.00.4	Roller arm	1
10.057.222.00	Screw	2
11.44840.00.4	Roller arm with brake shoe	1
11.44842.00.4	Shaft	1
11.10260.00.5	Ball bearing	2
11.40332.01.4	Washer	1
11.40332.02.4	Washer	1
10.037.802.14	Washer	2
10.110.310.05	Nut	1
11.45613.00.4	Shaft	1
10.037.136.00	Washer	2
10.110.312.05	Nut	1
11.41202.10.4	Spring	1
15.00341.00.4	Brake drum	1
10.032.108.04	Retaining ring	1

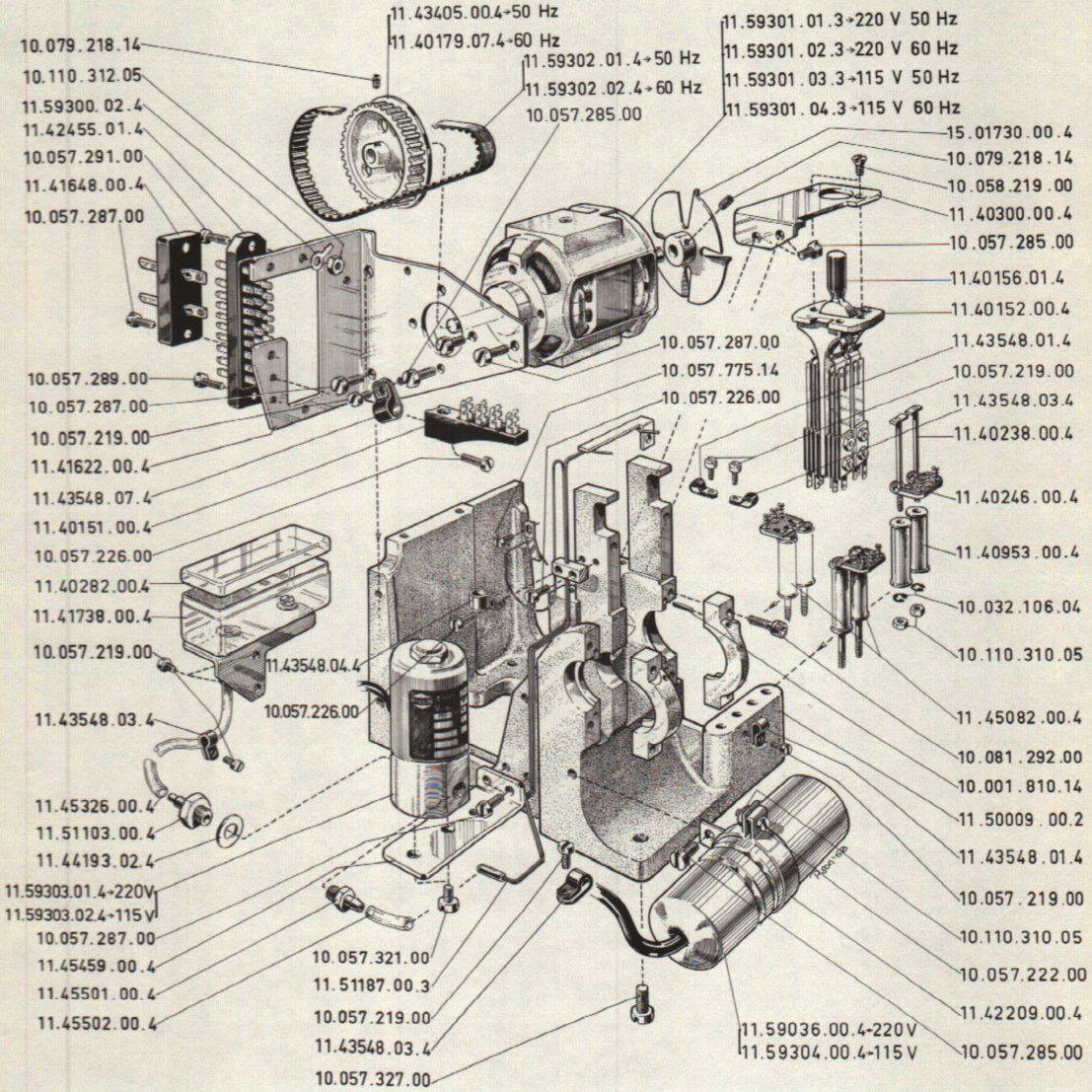
11.43405.00.4→50 Hz
11.40179.07.4→60 Hz
11.59302.01.4→50 Hz
11.59302.02.4→60 Hz
10.057.285.00
11.59301.01.3→220 V 50 Hz
11.59301.02.3→220 V 60 Hz
11.59301.03.3→115 V 50 Hz
11.59301.04.3→115 V 60 Hz
10.079.218.14
10.110.312.05
11.59300.02.4
11.42455.01.4
10.057.291.00
11.41648.00.4
10.057.287.00
15.01730.00.4
10.079.218.14
10.058.219.00
11.40300.00.4
10.057.285.00
11.40156.01.4
11.40152.00.4
10.057.287.00
10.057.775.14
10.057.226.00
11.43548.01.4
10.057.219.00
11.43548.03.4
11.40238.00.4
10.057.289.00
10.057.287.00
10.057.219.00
11.41622.00.4
11.43548.07.4
11.40151.00.4
10.057.226.00
11.40282.00.4
11.41738.00.4
10.057.219.00
11.43548.04.4
10.057.226.00
11.43548.03.4
11.40246.00.4
11.40953.00.4
10.032.106.04
10.110.310.05
11.45082.00.4
10.081.292.00
10.001.810.14
11.50009.00.2
11.43548.01.4
10.057.219.00
10.110.310.05
10.057.222.00
11.42209.00.4
10.057.285.00
11.45326.00.4
11.51103.00.4
11.44193.02.4
11.59303.01.4→220V
11.59303.02.4→115V
10.057.287.00
11.45459.00.4
11.45501.00.4
11.45502.00.4
10.057.321.00
11.51187.00.3
10.057.219.00
11.43548.03.4
10.057.327.00
11.59036.00.4-220V
11.59304.00.4-115V

2

BODY, ELECTRICAL COMPONENTS AND LUBRICATION SYSTEM

Part No.	Description	Qty
11.50009.00.2	Body	1
10.057.327.00	Screw	4
10.001.810.14	Pin	4
10.081.292.00	Screw	4
11.59301.01.3	Motor 220 V, 50 Hz	1
11.59301.02.3	Motor 220 V, 60 Hz	1
11.59301.03.3	Motor 115 V, 50 Hz	1
11.59301.04.3	Motor 115 V, 60 Hz	1
10.057.285.00	Screw	4
11.43405.00.4	Cog-wheel, 50 Hz	1
11.40179.07.4	Cog-wheel, 60 Hz	1
10.079.218.14	Stop screw	2
11.59302.01.4	Cog-belt, 50 Hz	1
11.59302.02.4	Cog-belt, 60 Hz	1
15.01730.00.4	Propeller	1
10.079.218.14	Stop screw	2
11.41622.00.4	Motor support	1
10.057.287.00	Screw	3
11.41648.00.4	Power input assembly	1
10.057.287.00	Screw	2
11.42455.01.4	Connector, Tuchel L2070	1
10.057.291.00	Screw	1
11.59300.02.4	Lug	1
10.110.312.05	Nut	1
10.057.289.00	Screw	1
11.40151.00.4	Lug support, Philips 88033	1
10.057.226.00	Screw	1
11.43548.07.4	Cable clamp	1
10.057.219.00	Screw	1

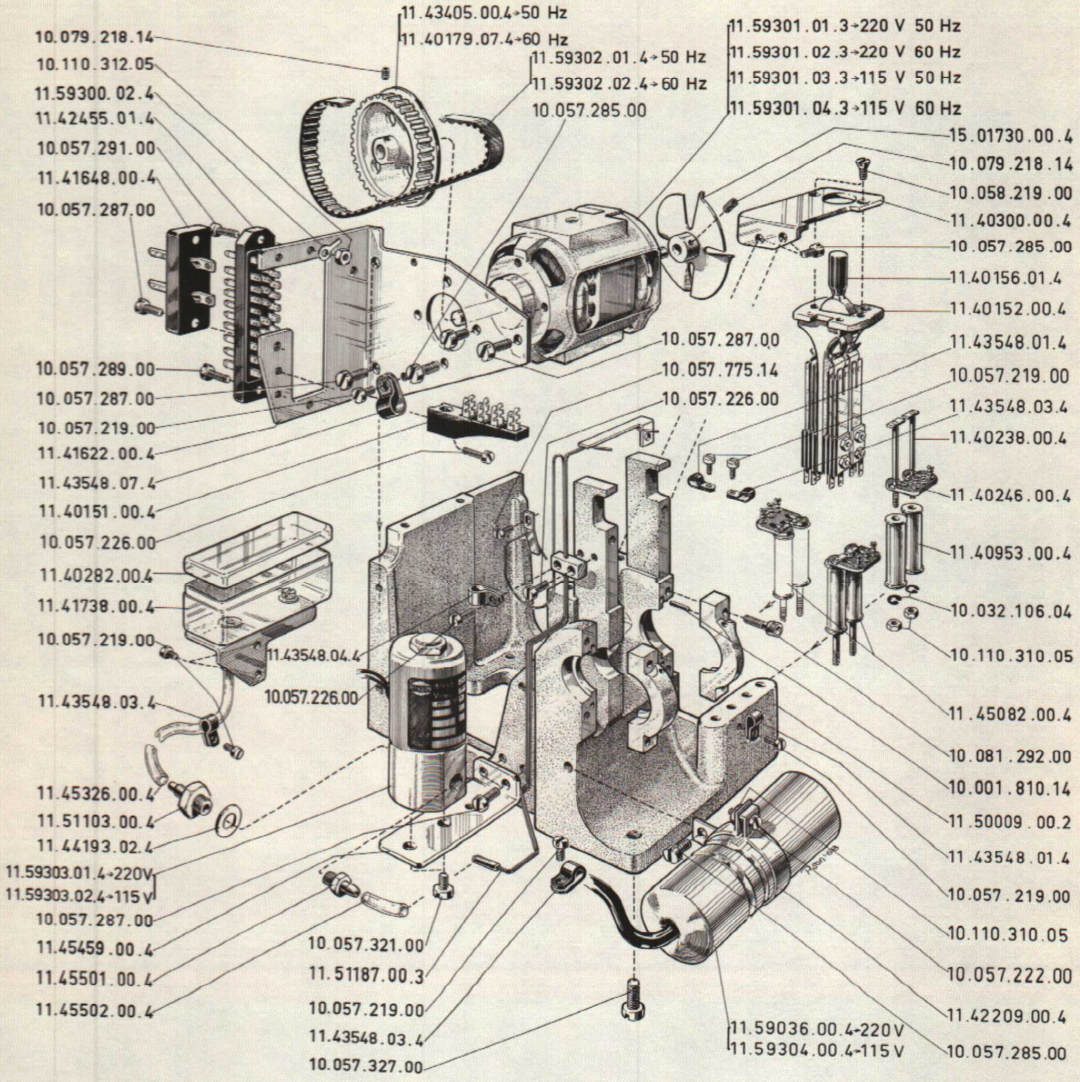
11.43405.00.4÷50 Hz
11.40179.07.4÷60 Hz
11.59302.01.4÷50 Hz
11.59302.02.4÷60 Hz
10.057.285.00
11.59301.01.3÷220 V 50 Hz
11.59301.02.3÷220 V 60 Hz
11.59301.03.3÷115 V 50 Hz
11.59301.04.3÷115 V 60 Hz
10.079.218.14
10.110.312.05
11.59300.02.4
11.42455.01.4
10.057.291.00
11.41648.00.4
10.057.287.00
15.01730.00.4
10.079.218.14
10.058.219.00
11.40300.00.4
10.057.285.00
11.40156.01.4
11.40152.00.4
10.057.287.00
10.057.775.14
10.057.226.00
11.43548.01.4
10.057.219.00
11.43548.03.4
11.40238.00.4
11.40246.00.4
11.40953.00.4
10.032.106.04
10.110.310.05
10.057.289.00
10.057.287.00
10.057.219.00
11.41622.00.4
11.43548.07.4
11.40151.00.4
10.057.226.00
11.40282.00.4
11.41738.00.4
10.057.219.00
11.43548.04.4
10.057.226.00
11.43548.03.4
11.45082.00.4
10.081.292.00
10.001.810.14
11.50009.00.2
11.43548.01.4
10.057.219.00
10.110.310.05
10.057.222.00
11.42209.00.4
10.057.285.00
11.45326.00.4
11.51103.00.4
11.44193.02.4
11.59303.01.4÷220V
11.59303.02.4÷115 V
10.057.287.00
11.45459.00.4
11.45501.00.4
11.45502.00.4
10.057.321.00
11.51187.00.3
10.057.219.00
11.43548.03.4
10.057.327.00
11.59036.00.4÷220V
11.59304.00.4÷115 V

Part No.	Description	Qty
11.40152.00.4	Lever switch	1
11.40156.01.4	Knob	1
10.058.219.00	Screw	2
11.40300.00.4	Lever switch support	1
10.057.285.00	Screw	2
11.43548.01.4	Cable clamp	1
11.43548.03.4	Cable clamp	1
10.057.219.00	Screw	2
11.45082.00.4	Pulse transmitter	3
11.40238.00.4	Core	6
11.40953.00.4	Coil	6
11.40246.00.4	Plinth complete	3
10.032.106.04	Retaining ring	6
10.110.310.05	Nut	6
11.43548.01.4	Cable clamp	1
10.057.219.00	Screw	1
11.59036.00.4	Capacitor, 3 µF, 220 V	1
11.59304.00.4	Capacitor, 6 µF, 115 V	1
11.42209.00.4	Capacitor support	1
10.057.222.00	Screw	1
10.110.310.05	Nut	1
10.057.285.00	Screw	1
11.43548.03.4	Cable clamp	1
10.057.219.00	Screw	1
11.59303.01.4	Oil valve, 220 V	1
11.59303.02.4	Oil valve, 115 V	1
10.057.321.00	Screw	2
11.45459.00.4	Oil valve support	1
10.057.287.00	Screw	2
11.45501.00.4	Nipple	1
11.45502.00.4	Plastic tube	1
11.51187.00.3	Tube and tube support	1
11.43548.04.4	Cable clamp	1
10.057.226.00	Screw	2
10.057.775.14	Screw	1

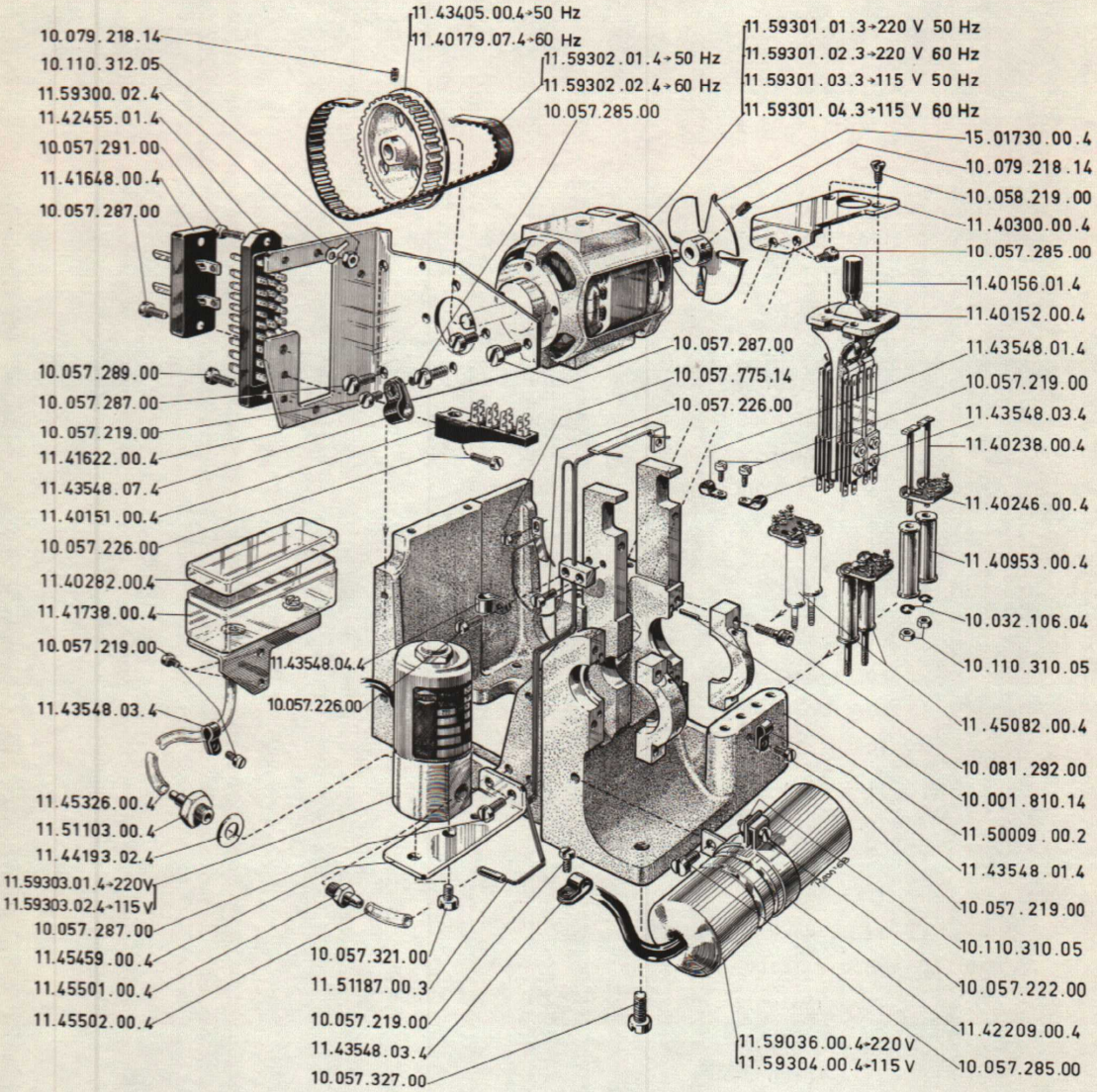
11.43405.00.4→50 Hz
11.40179.07.4→60 Hz
11.59302.01.4→50 Hz
11.59302.02.4→60 Hz
10.057.285.00
11.59301.01.3→220 V 50 Hz
11.59301.02.3→220 V 60 Hz
11.59301.03.3→115 V 50 Hz
11.59301.04.3→115 V 60 Hz
10.079.218.14
10.110.312.05
11.59300.02.4
11.42455.01.4
10.057.291.00
11.41648.00.4
10.057.287.00
15.01730.00.4
10.079.218.14
10.058.219.00
11.40300.00.4
10.057.285.00
11.40156.01.4
11.40152.00.4
10.057.287.00
10.057.775.14
10.057.226.00
11.43548.01.4
10.057.219.00
11.43548.03.4
11.40238.00.4
11.40246.00.4
11.40953.00.4
10.032.106.04
10.110.310.05
11.45082.00.4
10.081.292.00
10.001.810.14
11.50009.00.2
11.43548.01.4
10.057.219.00
10.110.310.05
10.057.222.00
11.42209.00.4
10.057.285.00
10.057.289.00
10.057.287.00
10.057.219.00
11.41622.00.4
11.43548.07.4
11.40151.00.4
10.057.226.00
11.40282.00.4
11.41738.00.4
10.057.219.00
11.43548.04.4
10.057.226.00
11.43548.03.4
11.45326.00.4
11.51103.00.4
11.44193.02.4
11.59303.01.4→220V
11.59303.02.4→115V
10.057.287.00
11.45459.00.4
11.45501.00.4
11.45502.00.4
10.057.321.00
11.51187.00.3
10.057.219.00
11.43548.03.4
10.057.327.00
11.59036.00.4→220V
11.59304.00.4→115V

Part No.	Description	Qty
11.41738.00.4	Oil container with support and plastic tube	1
11.40282.00.4	Oil container	1
10.057.219.00	Screw	2
11.45326.00.4	Plastic tube	1
11.43548.03.4	Cable clamp	1
10.057.219.00	Screw	1
11.51103.00.4	Nipple	1
11.44193.02.4	Washer	1

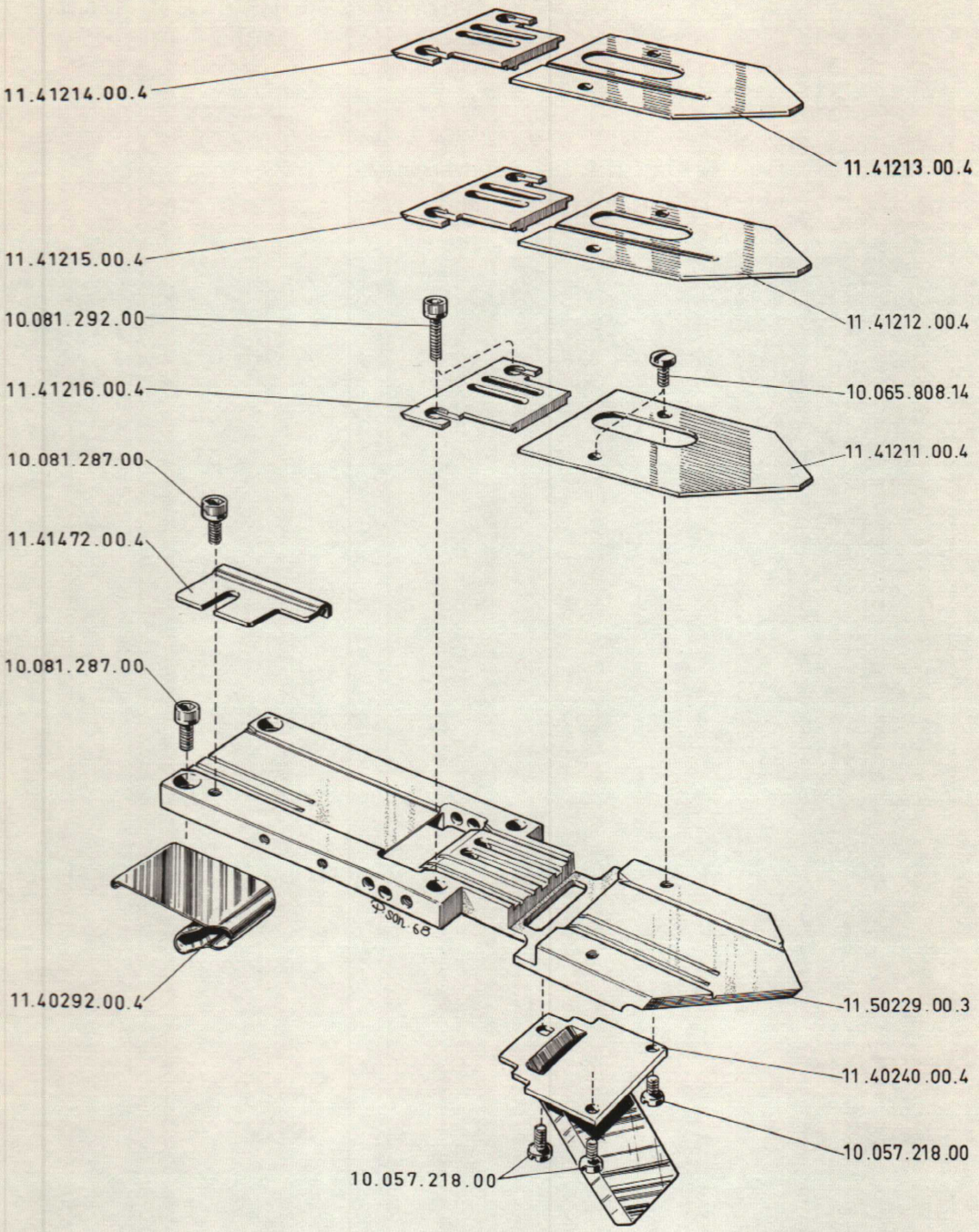
11.41214.00.4
11.41213.00.4
11.41215.00.4
10.081.292.00
11.41212.00.4
11.41216.00.4
10.065.808.14
11.41211.00.4
10.081.287.00
11.41472.00.4
10.081.287.00
11.40292.00.4
11.50229.00.3
11.40240.00.4
10.057.218.00
10.057.218.00

3

TAPE GUIDE PLATES

Part No.	Description	Qty
11.50229.00.3	Tape path way	1
10.081.287.00	Screw	2
11.40292.00.4	Spring	1
11.40240.00.4	Chad exhaust	1
10.057.218.00	Screw	4
11.41212.00.4	Front guide plate for 5 track tape	1
11.41213.00.4	Front guide plate for 6 and 7 track tape	1
11.41211.00.4	Front guide plate for 8 track tape	1
10.065.808.14	Screw	2
11.41215.00.4	Middle guide plate for 5 track tape	1
11.41214.00.4	Middle guide plate for 6 and 7 track tape	1
11.41216.00.4	Middle guide plate for 8 track tape	1
10.081.292.00	Screw	2
11.41472.00.4	Rear guide plate	1
10.081.287.00	Screw	1

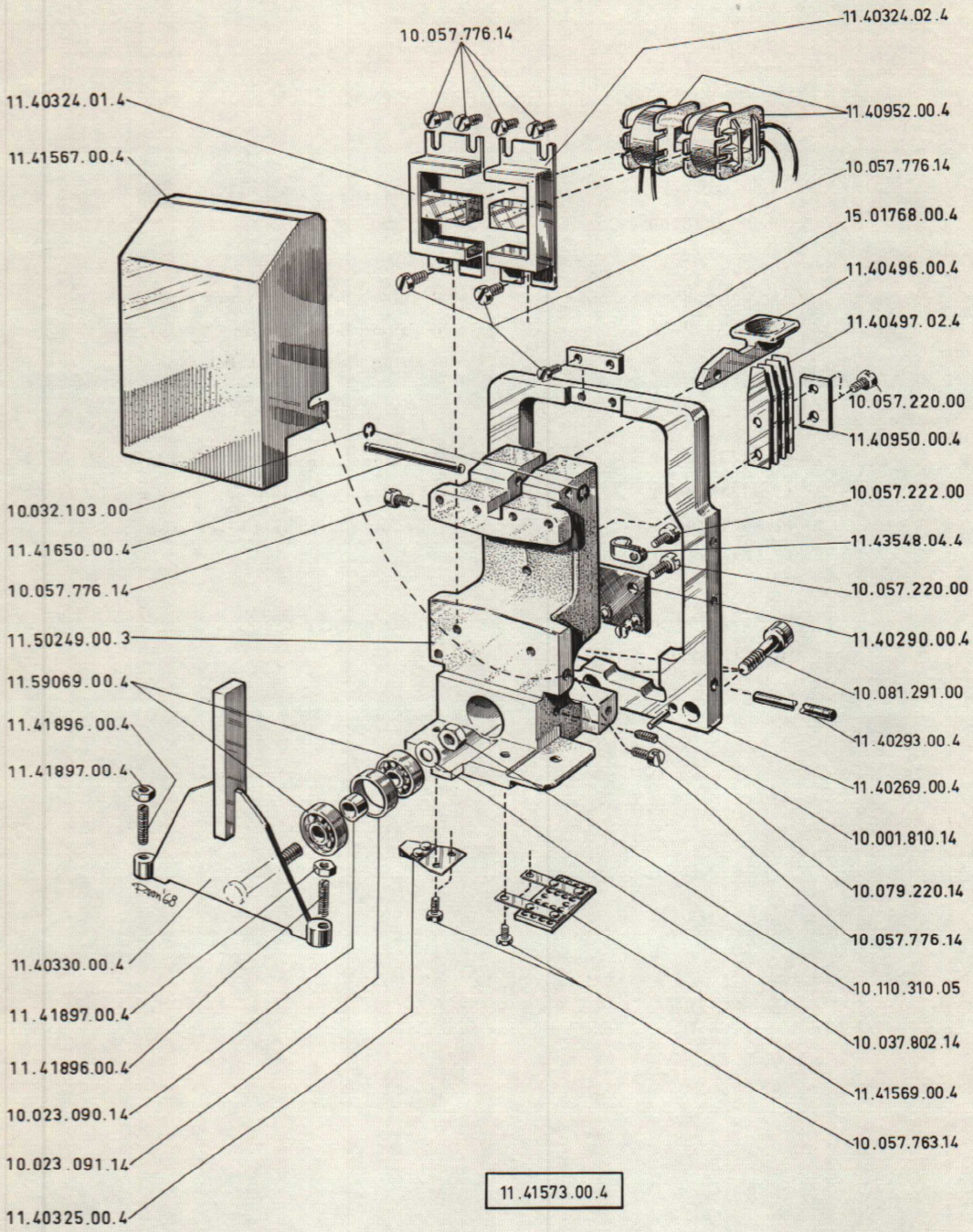
10.057.776.14
11.40324.02.4
11.40324.01.4
11.40952.00.4
11.41567.00.4
10.057.776.14
15.01768.00.4
11.40496.00.4
11.40497.02.4
10.057.220.00
11.40950.00.4
10.032.103.00
11.41650.00.4
10.057.776.14
10.057.222.00
11.43548.04.4
10.057.220.00
11.50249.00.3
11.40290.00.4
11.59069.00.4
11.41896.00.4
11.41897.00.4
10.081.291.00
11.40293.00.4
11.40269.00.4
10.001.810.14
10.079.220.14
10.057.776.14
10.110.310.05
10.037.802.14
11.41569.00.4
10.057.763.14
11.40330.00.4
11.41897.00.4
11.41896.00.4
10.023.090.14
10.023.091.14
11.40325.00.4
11.41573.00.4

4

TAPE FEED MECHANISM

Part No.	Description	Qty
11.41573.00.4	Tape feed mechanism complete	1
10.081.291.00	Screw	3
10.001.810.14	Pin	2
11.40269.00.4	Frame	1
11.40293.00.4	Shaft	1
15.01768.00.4	Stop washer	1
10.057.776.14	Screw	2
11.50249.00.3	Holder	1
11.41567.00.4	Protective cover	1
10.057.776.14	Screw	2
11.40496.00.4	Lock arm	1
11.41650.00.4	Shaft	1
10.032.103.00	Retaining ring	2
11.40497.02.4	Spring	4
11.40950.00.4	Washer	1
10.057.220.00	Screw	2
11.40325.00.4	Front brake plate	1
10.057.763.14	Screw	2
11.41569.00.4	Rear brake plate	1
10.057.763.14	Screw	2
11.54001.00.4	Feed and brake coils with plinth	1
11.40952.00.4	Coil	2
11.40324.01.4	Magnetic core	1
11.40324.02.4	Magnetic core	1
10.057.776.14	Screw	6
11.40290.00.4	Plinth	1
10.057.220.00	Screw	1
10.057.222.00	Screw	1
11.43548.04.4	Cable clamp	1

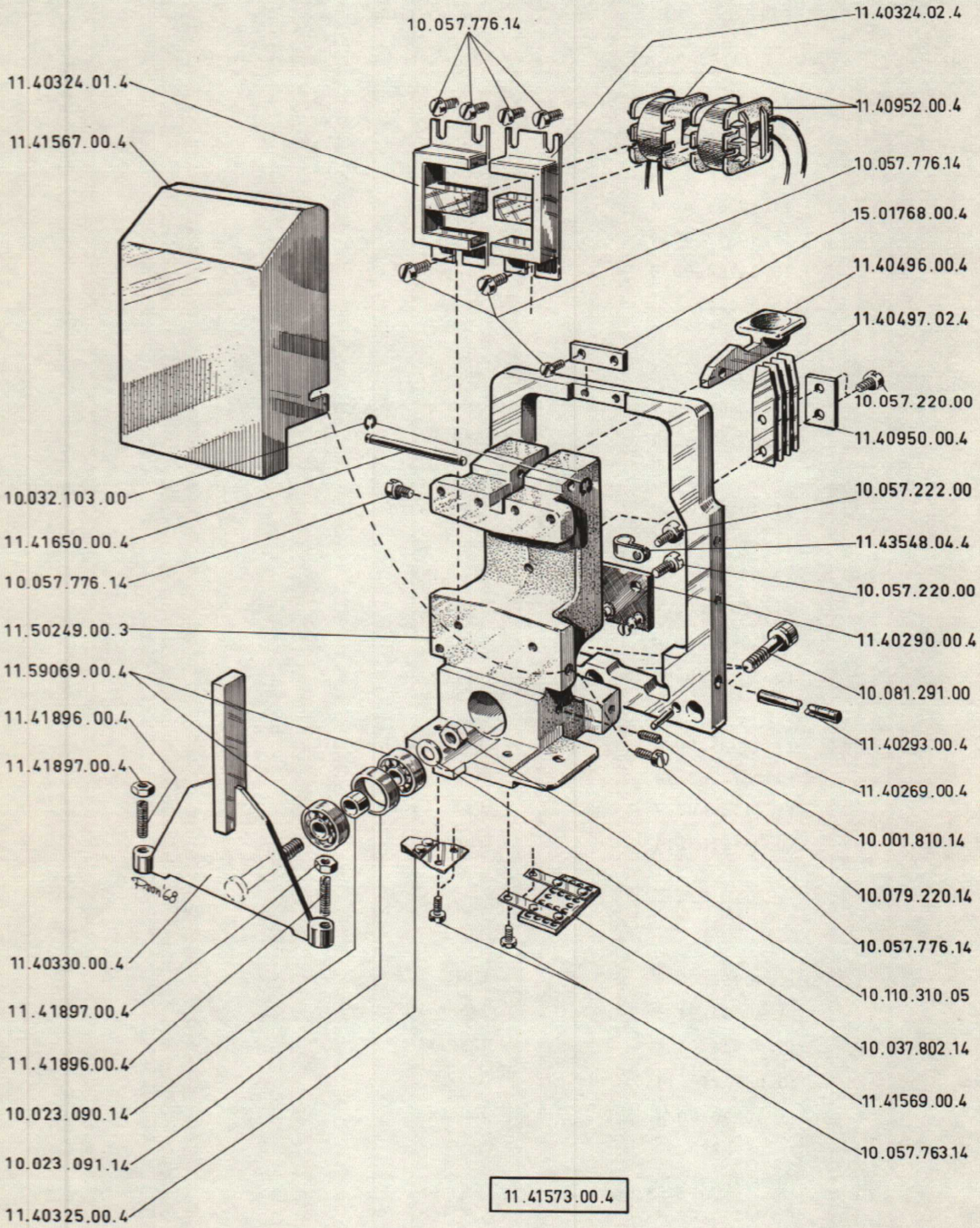
10.057.776.14
11.40324.02.4
11.40324.01.4
11.40952.00.4
11.41567.00.4
10.057.776.14
15.01768.00.4
11.40496.00.4
11.40497.02.4
10.057.220.00
11.40950.00.4
10.032.103.00
10.057.222.00
11.41650.00.4
11.43548.04.4
10.057.776.14
10.057.220.00
11.50249.00.3
11.40290.00.4
11.59069.00.4
10.081.291.00
11.41896.00.4
11.40293.00.4
11.41897.00.4
11.40269.00.4
10.001.810.14
10.079.220.14
11.40330.00.4
10.057.776.14
11.41897.00.4
10.110.310.05
11.41896.00.4
10.037.802.14
10.023.090.14
11.41569.00.4
10.023.091.14
10.057.763.14
11.40325.00.4
11.41573.00.4

Part No.	Description	Qty
11.40330.00.4	Rocker	1
11.41896.00.4	Screw	2
11.41897.00.4	Nut	2
11.59069.00.4	Ball bearing	2
10.023.090.14	Ring	1
10.023.091.14	Ring	1
10.037.802.14	Washer	1
10.110.310.05	Nut	1
10.079.220.14	Stop screw	1

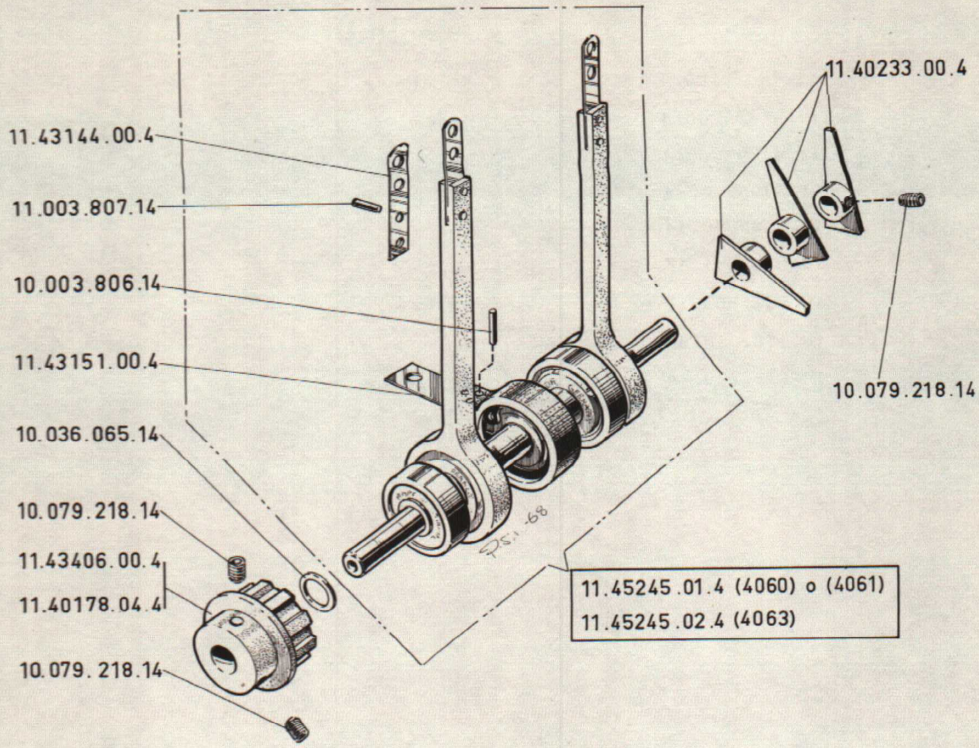
11.43144.00.4
11.003.807.14
10.003.806.14
11.43151.00.4
10.036.065.14
10.079.218.14
11.43406.00.4
11.40178.04.4
10.079.218.14
11.40233.00.4
10.079.218.14
11.45245.01.4 (4060) o (4061)
11.45245.02.4 (4063)

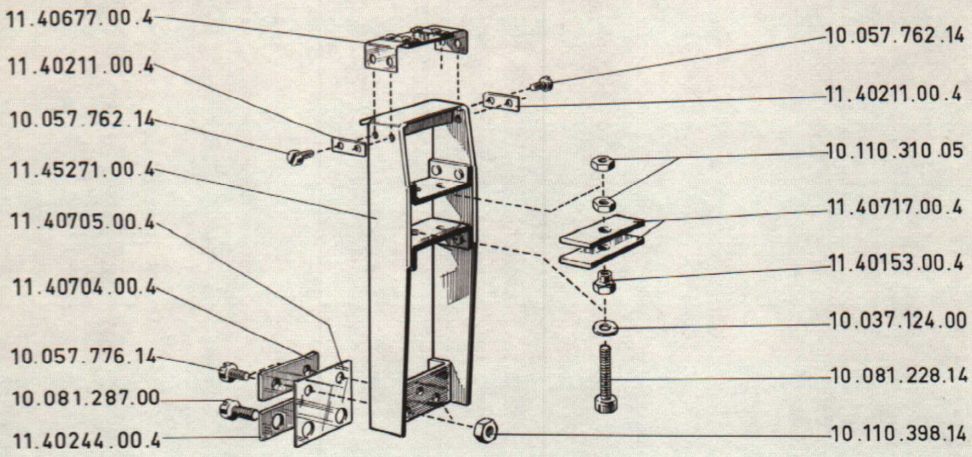
11.40677.00.4
11.40211.00.4
10.057.762.14
11.45271.00.4
11.40705.00.4
11.40704.00.4
10.057.776.14
10.081.287.00
11.40244.00.4
10.057.762.14
11.40211.00.4
10.110.310.05
11.40717.00.4
11.40153.00.4
10.037.124.00
10.081.228.14
10.110.398.14

5

MAIN SHAFT AND FEED ARM

Part No.	Description	Qty
11.45245.01.4	Main shaft complete FACIT 4060 and 4061 (Parts within dotted lines.)	1
11.45245.02.4	Main shaft complete FACIT 4063 (Parts within dotted lines.)	1
11.43144.00.4	Spring	2
10.003.807.14	Pin	4
11.43151.00.4	Spring	1
10.003.806.14	Pin	3
11.43406.00.4	Cog-wheel, 50 Hz	1
11.40178.04.4	Cog-wheel, 60 Hz	1
10.079.218.14	Stop screw	2
10.036.065.14	Washer	1
11.40233.00.4	Arm	3
10.079.218.14	Stop screw	3
11.45328.00.4	Feed arm without locking plate	1
11.45271.00.4	Feed arm	1
11.40704.00.4	Support	1
11.40705.00.4	Spring	1
10.057.776.14	Screw	2
10.110.398.14	Nut	2
11.40717.00.4	Bar	2
10.081.228.14	Screw	1
10.037.124.00	Washer	1
11.40153.00.4	Nut	1
10.110.310.05	Nut	2
11.40677.00.4	Locking plate	1
11.40211.00.4	Washer	2
10.057.762.14	Screw	4
11.40244.00.4	Support	1
10.081.287.00	Screw	2

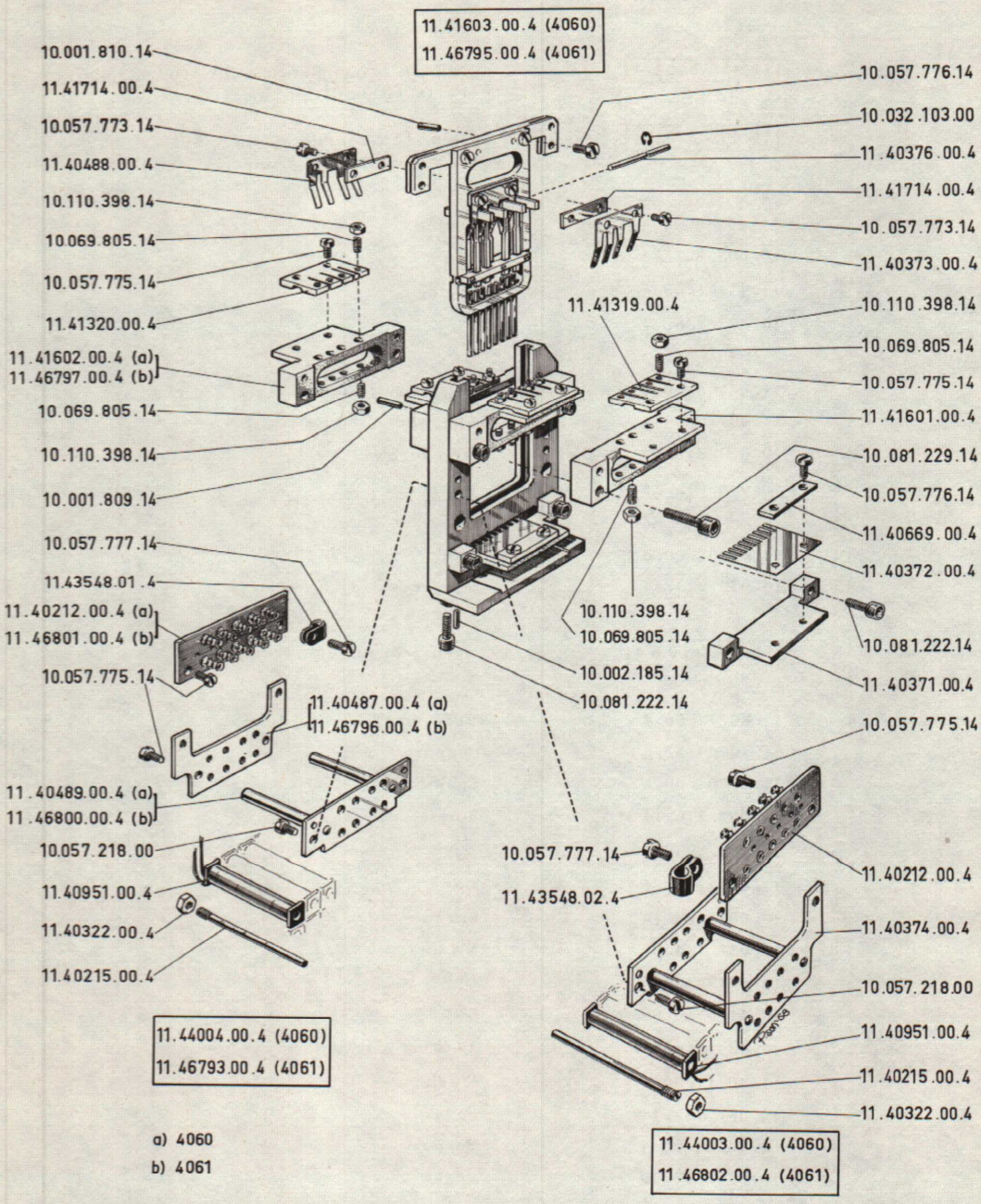
11.41603.00.4 (4060)
11.46795.00.4 (4061)
10.001.810.14
11.41714.00.4
10.057.773.14
11.40488.00.4
10.110.398.14
10.069.805.14
10.057.775.14
11.41320.00.4
11.41602.00.4 (a)
11.46797.00.4 (b)
10.069.805.14
10.110.398.14
10.001.809.14
10.057.777.14
11.43548.01.4
11.40212.00.4 (a)
11.46801.00.4 (b)
10.057.775.14
11.40487.00.4 (a)
11.46796.00.4 (b)
11.40489.00.4 (a)
11.46800.00.4 (b)
10.057.218.00
11.40951.00.4
11.40322.00.4
11.40215.00.4
11.44004.00.4 (4060)
11.46793.00.4 (4061)
a) 4060
b) 4061
10.057.776.14
10.032.103.00
11.40376.00.4
11.41714.00.4
10.057.773.14
11.40373.00.4
11.41319.00.4
10.110.398.14
10.069.805.14
10.057.775.14
11.41601.00.4
10.081.229.14
10.057.776.14
11.40669.00.4
11.40372.00.4
10.110.398.14
10.069.805.14
10.081.222.14
10.002.185.14
10.081.222.14
11.40371.00.4
10.057.775.14
10.057.777.14
11.43548.02.4
11.40212.00.4
11.40374.00.4
10.057.218.00
11.40951.00.4
11.40215.00.4
11.40322.00.4
11.44003.00.4 (4060)
11.46802.00.4 (4061)

6

PUNCH MECHANISM

Part No.	Description	Qty
11.41603.00.4	Punch mechanism complete Facit 4060	1
11.46795.00.4	Punch mechanism complete Facit 4061	1
10.081.222.14	Screw	2
10.002.185.14	Pin	2
11.44003.00.4	Front solenoid set, complete Facit 4060	1
11.46802.00.4	Front solenoid set, complete Facit 4061	1
10.057.218.00	Screw	2
11.44004.00.4	Rear solenoid set, complete Facit 4060	1
11.46793.00.4	Rear solenoid set, complete Facit 4061	1
10.057.218.00	Screw	2
11.40951.00.4	Coil	16
11.40215.00.4	Core	16
11.40322.00.4	Nut	16
11.40374.00.4	Front solenoid holder	1
11.40487.00.4	Rear solenoid plate Facit 4060	1
11.40489.00.4	Rear solenoid holder Facit 4060	1
11.40212.00.4	Plinth Facit 4060	2
11.46796.00.4	Rear solenoid plate Facit 4061	1
11.46800.00.4	Rear solenoid holder Facit 4061	1
11.46801.00.4	Plinth Facit 4061	1
10.057.775.14	Screw	6
10.057.777.14	Screw	2
11.43548.01.4	Cable clamp	1
11.43548.02.4	Cable clamp	1
11.40373.00.4	Front hammer spring	1
11.40488.00.4	Rear hammer spring	1
11.41714.00.4	Washer	2
10.057.773.14	Screw	4
10.001.810.14	Pin	2
11.40376.00.4	Shaft	1
10.032.103.00	Retaining ring	1
10.057.776.14	Screw	2

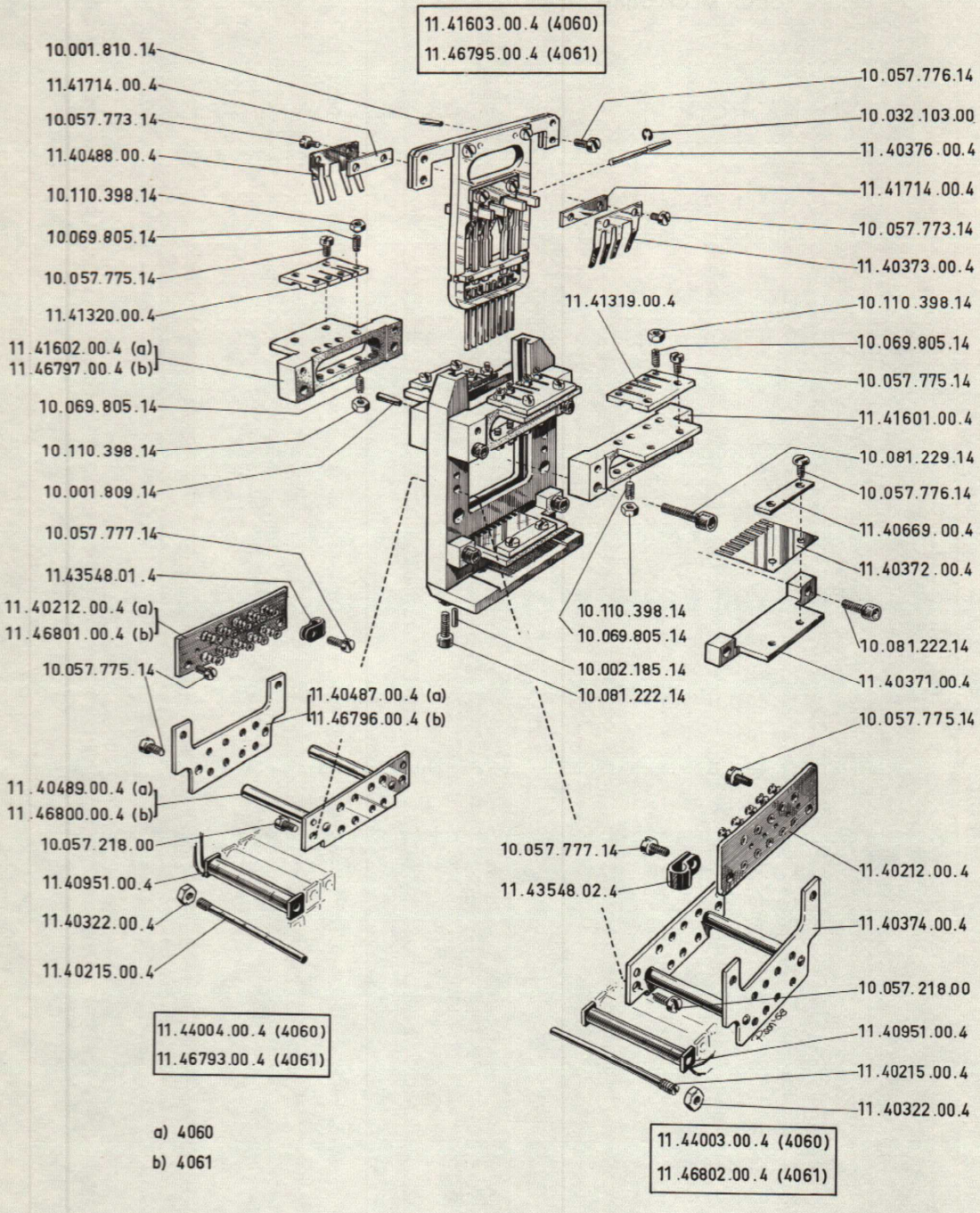
11.41603.00.4 (4060)
11.46795.00.4 (4061)
10.001.810.14
11.41714.00.4
10.057.773.14
11.40488.00.4
10.110.398.14
10.069.805.14
10.057.775.14
11.41320.00.4
11.41602.00.4 (a)
11.46797.00.4 (b)
10.069.805.14
10.110.398.14
10.001.809.14
10.057.777.14
11.43548.01.4
11.40212.00.4 (a)
11.46801.00.4 (b)
10.057.775.14
11.40487.00.4 (a)
11.46796.00.4 (b)
11.40489.00.4 (a)
11.46800.00.4 (b)
10.057.218.00
11.40951.00.4
11.40322.00.4
11.40215.00.4
11.44004.00.4 (4060)
11.46793.00.4 (4061)
a) 4060
b) 4061
10.057.776.14
10.032.103.00
11.40376.00.4
11.41714.00.4
10.057.773.14
11.40373.00.4
11.41319.00.4
10.110.398.14
10.069.805.14
10.057.775.14
11.41601.00.4
10.081.229.14
10.057.776.14
11.40669.00.4
11.40372.00.4
10.110.398.14
10.069.805.14
10.081.222.14
10.002.185.14
10.081.222.14
11.40371.00.4
10.057.775.14
10.057.777.14
11.43548.02.4
11.40212.00.4
11.40374.00.4
10.057.218.00
11.40951.00.4
11.40215.00.4
11.40322.00.4
11.44003.00.4 (4060)
11.46802.00.4 (4061)

Part No.	Description	Qty
11.41601.00.4	Front beam	1
11.41602.00.4	Rear beam Facit 4060	1
11.46797.00.4	Rear beam Facit 4061	1
10.081.229.14	Screw	2
10.001.809.14	Pin	2
11.41319.00.4	Spring	1
11.41320.00.4	Spring	1
10.057.775.14	Screw	4
10.069.805.14	Upper and lower adjustment screw	16
10.110.398.14	Nut	16
11.40371.00.4	Spring holder	1
10.081.222.14	Screw	2
11.40372.00.4	Stop spring	1
11.40669.00.4	Washer	1
10.057.776.14	Screw	2

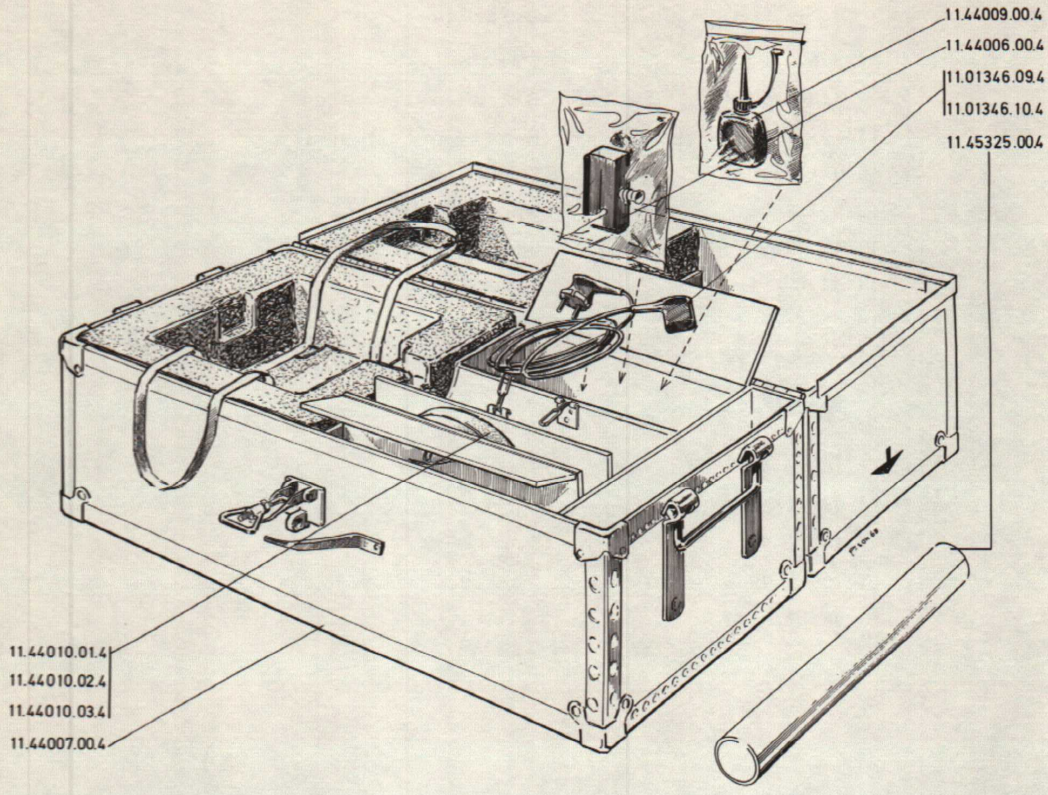
11.44009.00.4
11.44006.00.4
11.01346.09.4
11.01346.10.4
11.45325.00.4
11.44010.01.4
11.44010.02.4
11.44010.03.4
11.44007.00.4

11.43426.00.4

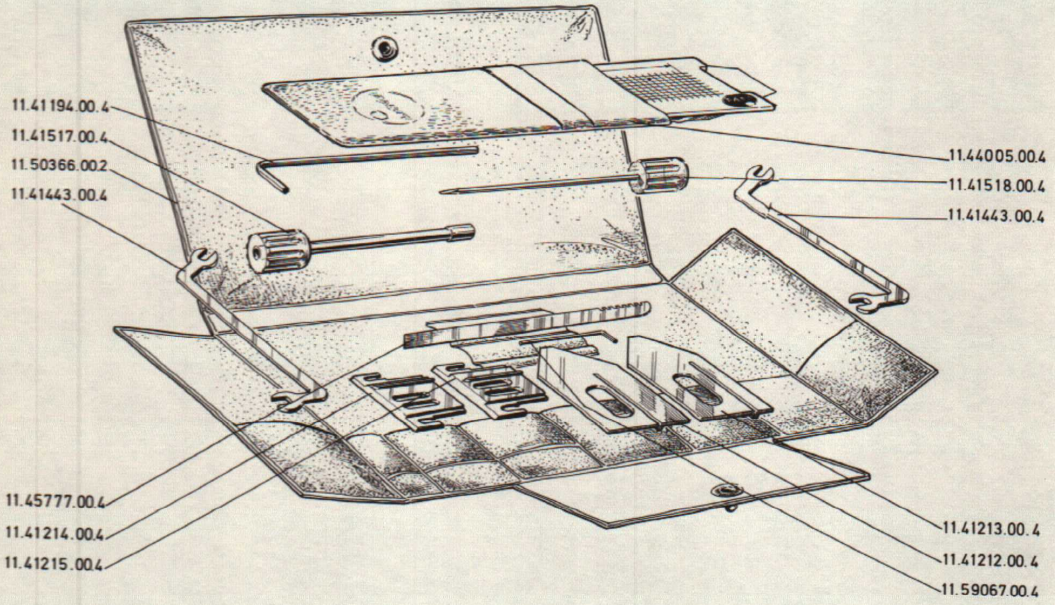
11.41194.00.4
11.41517.00.4
11.50366.00.2
11.41443.00.4
11.44005.00.4
11.41518.00.4
11.41443.00.4
11.45777.00.4
11.41214.00.4
11.41215.00.4
11.41213.00.4
11.41212.00.4
11.59067.00.4

7 ## ACCESSORIES

Part No.	Description	Qty
11.44007.00.4	Protective case	
11.45325.00.4	Chad exhaust tube	
11.44010.01.4	5-track tape reel, FACIT 4060	
11.44010.03.4	8-track tape reel, FACIT 4060	
11.44010.02.4	6 and 7-track tape reel, FACIT 4061	
11.44009.00.4	Oil can	
11.44006.00.4	Cable connector	
11.01346.09.4	Mains cable, Eur. 2-pin plug	
11.01346.10.4	Mains cable, Amer. 3-pin plug	
11.43426.00.4	Repair kit, complete	
11.50366.00.2	Repair kit case	
11.44005.00.4	Spacing template with case	
11.41518.00.4	Screwdriver	
11.41517.00.4	Socket wrench	
11.41194.00.4	Hex-key wrench	
11.59067.00.4	Hex-key wrench	
11.41443.00.4	Open-end hex wrench, two-ended	
11.45777.00.4	Tape pathway cleaner	
11.41212.00.4	Front guide plate for 5 track tape	
11.41213.00.4	Front guide plate for 6 and 7 track tape	
11.41215.00.4	Middle guide plate for 5 track tape	
11.41214.00.4	Middle guide plate for 6 and 7 track tape	

Cross-indexed list

Part No.	Description	Section II Page No.	Old No.	Remarks
11.43548.03.4	Cable clamp	2-2, -3	E13548/3	
11.43548.04.4	Cable clamp	2-2, 4-1	E13548/4	
11.43548.07.4	Cable clamp	2-1	E13548/7	
11.44003.00.4	Front solenoid set, complete Facit 4060	6-1	E14003	
11.44004.00.4	Rear solenoid set, complete, Facit 4060	6-1	E14004	
11.44005.00.4	Spacing template with case	7-1	E14005	
11.44006.00.4	Cable connector	7-1	E14006	
11.44007.00.4	Protective case	7-1	E14007	
11.44009.00.4	Oil can	7-1	E14009	
11.44010.01.4	5-track tape reel (Facit 4060)	7-1	E14010/1	
11.44010.02.4	6 and 7 track tape reel (Facit 4061)	7-1	E14010/2	
11.44010.03.4	8-track tape reel (Facit 4060)	7-1	E14010/3	
11.44109.00.4	Shock absorber	1-1	E14109	
11.44193.01.4	Washer	1-1	E14193/1	
11.44193.02.4	Washer	2-3	E14193/2	
11.44840.00.4	Roller arm with brake shoe	1-2	E14840	
11.44842.00.4	Shaft	1-2	E14842	
11.44843.00.4	Roller arm	1-2	E14843	
11.44848.00.4	Spring	1-2	E14848	
11.45082.00.4	Pulse transmitter	2-2	E15082	
11.45245.01.4	Main shaft complete Facit 4060	5-1	E15245	
11.45245.02.4	Main shaft complete Facit 4063	5-1		
11.45271.00.4	Feed arm	5-1	E15271	
11.45325.00.4	Chad exhaust tube	1-1, 7-1	E15325	
11.45326.00.4	Plastic tube	2-3	E15326	
11.45328.00.4	Feed arm without locking plate	5-1	E15328	
11.45459.00.4	Support	2-2	E15459	
11.45501.00.4	Nipple	2-2	E15501	
11.45502.00.4	Plastic tube	2-2	E15502	
11.45613.00.4	Shaft	1-2	E15613	
11.45626.00.4	Knob	1-2	E15626	
11.45654.00.4	Protective grid	1-1	E15654	
11.45731.00.4	Angle bracket	1-1	E15731	
11.45777.00.4	Tape pathway cleaner	7-1	E15777	

Cross-indexed list

Part No.	Description	Section II Page No.	Old No.	Remarks
11.46793.00.4	Rear solenoid set, complete, Facit 4061	6-1	E16793	
11.46795.00.4	Punch mechanism, complete, Facit 4061	6-1	E16795	
11.46796.00.4	Rear solenoid plate, Facit 4061	6-1	E16796	
11.46797.00.4	Rear beam, Facit 4061	6-2	E16797	
11.46800.00.4	Rear solenoid holder, Facit 4061	6-1	E16800	
11.46801.00.4	Plinth, Facit 4061	6-1	E16801	
11.46802.00.4	Front set of solenoids, complete Facit 4061	6-1	E16802	
11.50009.00.2	Body	2-1	C10009	
11.50105.01.2	Case	1-1	C10105	
11.50229.00.3	Tape pathway	3-1	D10229	
11.50249.00.3	Holder	4-1	D10249	
11.50277.00.3	Beam	1-2	D10277	
11.50366.00.2	Repair kit case	7-1	C10366	
11.50371.00.3	Hub complete with inner flange	1-1	D10371	
11.50410.00.3	Flange	1-2	D10410	
11.50974.01.3	Holder	1-2	D10974	
11.50975.01.3	Hub	1-2	D10975	
11.51012.00.3	Case complete, without cover plates	1-1	D11012	
11.51103.00.4	Nipple	2-3	E11102/120	
11.51187.00.3	Tube and tube support	2-2	D11187	
11.51202.00.3	Grip ring	1-2	D11202	
11.51203.00.3	Flange with knob and grip ring	1-1	D11203	
11.54001.00.4	Feed and brake coils with plinth	4-1		
11.59036.00.4	Capacitor 3 µF	2-2		
11.59067.00.4	Hex-key wrench	7-1		
11.59069.00.4	Ball bearing	4-2		
11.59078.00.4	Pin	1-1		
11.59300.02.4	Lug	2-1	E95046/2	
11.59301.01.3	Motor 220 V, 50 Hz	2-1	D95000	
11.59301.02.3	Motor 220 V, 60 Hz	2-1	D95000/2	
11.59301.03.3	Motor 115 V, 50 Hz	2-1	D95000/3	
11.59301.04.3	Motor 115 V, 60 Hz	2-1	D95000/4	
11.59302.01.4	Cog-belt, 50 Hz	2-1	E95165	
11.59302.02.4	Cog-belt, 60 Hz	2-1	E95165/2	
11.59303.01.4	Oil valve, 220 V	2-2	E95111	

Cross-indexed list

Part No.	Description	Section II Page No.	Old No.	Remarks
11.40258.00.4	Cover plate	1-1	E10258	
11.40259.00.4	Cover plate	1-1	E10259	
11.40260.00.4	Hinge	1-1	E10260	
11.40269.00.4	Frame	4-1	E10269	
11.40282.00.4	Oil container	2-3	E10282	
11.40290.00.4	Plinth	4-1	E10290	
11.40292.00.4	Spring	3-1	E10292	
11.40293.00.4	Shaft	4-1	E10293	
11.40300.00.4	Lever switch support	2-2	E10300	
11.40322.00.4	Nut	6-1	E10322	
11.40324.01.4	Magnetic core	4-1	E10324/1	
11.40324.02.4	Magnetic core	4-1	E10324/2	
11.40325.00.4	Front brake plate	4-1	E10325	
11.40330.00.4	Rocker	4-2	E10330	
11.40332.01.4	Washer	1-2	E10332/1	
11.40332.02.4	Washer	1-2	E10332/2	
11.40371.00.4	Spring holder	6-2	E10371	
11.40372.00.4	Stop spring	6-2	E10372	
11.40373.00.4	Front hammer spring	6-1	E10373	
11.40374.00.4	Front solenoid holder	6-1	E10374	
11.40376.00.4	Shaft	6-1	E10376	
11.40487.00.4	Rear solenoid plate Facit 4060	6-1	E10487	
11.40488.00.4	Rear hammer spring	6-1	E10488	
11.40489.00.4	Rear solenoid holder Facit 4060	6-1	E10489	
11.40496.00.4	Lock arm	4-1	E10496	
11.40497.02.4	Spring	4-1	E10497/2	
11.40668.00.4	Sign plate	1-1	E10668	
11.40669.00.4	Washer	6-2	E10669	
11.40677.00.4	Locking plate	5-1	E10677	
11.40704.00.4	Support	5-1	E10704	
11.40705.00.4	Spring	5-1	E10705	
11.40717.00.4	Bar	5-1	E10717	
11.40950.00.4	Washer	4-1	E10950	
11.40951.00.4	Coil	6-1	E15180	
11.40952.00.4	Coil	4-1	E15181	
11.40953.00.4	Coil	2-2	E15182	

Cross-indexed list

Part No.	Description	Section II Page No.	Old No.	Remarks
11.41194.00.4	Hex-key wrench	7-1	E11194	
11.41202.10.4	Spring	1-2	E11202/10	
11.41211.00.4	Front guide plate	3-1	E11211	
11.41212.00.4	Front guide plate	3-1, 7-1	E11212	
11.41213.00.4	Front guide plate	3-1, 7-1	E11213	
11.41214.00.4	Middle guide plate	3-1, 7-1	E11214	
11.41215.00.4	Middle guide plate	3-1, 7-1	E11215	
11.41216.00.4	Middle guide plate	3-1	E15773	
11.41271.01.3	Cover	1-1	D11271	
11.41319.00.4	Spring	6-2	E11319	
11.41320.00.4	Spring	6-2	E11320	
11.41443.00.4	Open-end hex wrench two-ended	7-1	E11443	
11.41472.00.4	Rear guide plate	3-1	E11472	
11.41517.00.4	Socket wrench	7-1	E11517	
11.41518.00.4	Screwdriver	7-1	E11518	
11.41567.00.4	Protective cover	4-1	E11567	
11.41569.00.4	Rear brake plate	4-1	E11569	
11.41573.00.4	Tape feed mechanism complete	4-1	E11573	
11.41601.00.4	Front beam	6-2	E11601	
11.41602.00.4	Rear beam, Facit 4060	6-2	E11602	
11.41603.00.4	Punch mechanism, complete, Facit 4060	6-1	E11603	
11.41622.00.4	Motor support	2-1	E11622	
11.41648.00.4	Power input assembly	2-1	E11648	
11.41650.00.4	Shaft	4-1	E11650	
11.41714.00.4	Washer	6-1	E11714	
11.41738.00.4	Oil container with support and plastic tube	2-3	E11738	
11.41896.00.4	Screw	4-2	E11896	
11.41897.00.4	Nut	4-2	E11897	
11.42187.00.4	Flexible-tube holder	1-1	E12187	
11.42209.00.4	Capacitor support	2-2	E12209	
11.42455.01.4	Connector Tuchel L2070	2-1	E12455	
11.43144.00.4	Spring	5-1	E13144	
11.43151.00.4	Spring	5-1	E13151	
11.43405.00.4	Cog-wheel	2-1	E13405	
11.43406.00.4	Cog-wheel	5-1	E13406	
11.43426.00.4	Repair kit complete	7-1	E13426	
11.43548.01.4	Cable clamp	2-2, 6-1	E13548	
11.43548.02.4	Cable clamp	6-1	E13548/2	

Cross-indexed list

Part No.	Description	Section II Page No.	Old No.	Remarks
10.001.809.14	Pin	6-2	CP 2x10	
10.001.810.14	Pin	2-1,4-1,6-1	CP 2x6	
10.002.185.14	Pin	6-1	CPK 2x6	
10.003.806.14	Pin	5-1	KP 1.5x10	
10.003.807.14	Pin	5-1	KP 2x6	
10.023.090.14	Ring	4-2	E10234/4	
10.023.091.14	Ring	4-2	E10234/5	
10.032.103.00	Retaining ring	4-1,6-1		
10.032.106.04	Retaining ring	2-2	B02099/1	
10.032.108.04	Retaining ring	1-2	B02099/3	
10.036.062.14	Washer	1-2		
10.036.065.14	Washer	5-1	E15442/3	
10.037.124.00	Washer	5-1	BRB 3.2x6	
10.037.136.00	Washer	1-2	BRB 4.3x8	
10.037.802.14	Washer	1-2,4-2		
10.037.803.14	Washer	1-1		
10.057.218.00	Screw	3-1,6-1	ECS 3x4	
10.057.219.00	Screw	2-1,-2,-5	ECS 3x5	
10.057.220.00	Screw	4-1	ECS 3x6	
10.057.222.00	Screw	1-2,2-2,4-1	ECS 3x8	
10.057.226.00	Screw	1-1,2-1,-2	ECS 3x12	
10.057.285.00	Screw	1-1,2-1,-2	ECS 4x6	
10.057.287.00	Screw	2-1,-2	ECS 4x8	
10.057.289.00	Screw	2-1	ECS 4x10	
10.057.291.00	Screw	2-1	ECS 4x12	
10.057.321.00	Screw	2-2	ECS 5x6	
10.057.327.00	Screw	1-1,2-1	ECS 5x12	
10.057.762.14	Screw	5-1	ECS 1.7x2	
10.057.763.14	Screw	4-1	ECS 1.7x3	
10.057.773.14	Screw	6-1	ECS 2.3x2	
10.057.775.14	Screw	2-2,6-1,-2	ECS 2.3x4	
10.057.776.14	Screw	1-2,4-1,5-1,6-1, 6-2	ECS 2.3x5	
10.057.777.14	Screw	6-1	ECS 2.3x6	
10.058.219.00	Screw	2-2	FS 3x5	

Cross-indexed list

Part No.	Description	Section II Page No.	Old No.	Remarks
10.065.807.14	Screw	1-1	LKCS 3x8	
10.065.808.14	Screw	3-1	LKCS 3x4	
10.065.810.14	Screw	1-2	LKCS 3x6	
10.069.805.14	Screw	6-2	E12097/2	
10.079.218.14	Stop screw	2-1,5-1	SK6SS 3x4	
10.079.220.14	Stop screw	4-2	SK6SS 3x6	
10.081.222.14	Screw	6-1, -2	EC6S 3x8	
10.081.228.14	Screw	5-1	EC6S 3x16	
10.081.229.14	Screw	6-2	EC6S 3x18	
10.081.287.00	Screw	3-1,5-1	EC6S 4x8	
10.081.291.00	Screw	4-1	EC6S 4x12	
10.081.292.00	Screw	2-1,3-1	EC6S 4x14	
10.081.325.00	Screw	1-2	EC6S 5x10	
10.110.310.05	Nut	1-2, 2-2, 4-2, 5-1	LB6LM 3	
10.110.312.05	Nut	1-1, -2, 2-1	LB6LM 4	
10.110.398.14	Nut	1-2, 5-1, 6-2	LB6LM 2.3	
11.01346.09.4	Mains cable Eur. 2-pin plug	7-1	B01346/9	
11.01346.10.4	Mains cable Amer. 3-pin plug	7-1	B01346/10	
11.02630.01.5	Facit sign	1-1	A02630/1	
11.10260.00.5	Ball bearing	1-2	A10260	
11.40021.00.3	Cover complete	1-1	D10021	
11.40151.00.4	Lug support	2-1	E95103	
11.40152.00.4	Lever switch	2-2	E95099	
11.40153.00.4	Nut	5-1	E10153	
11.40156.01.4	Knob	2-2	E95101	
11.40171.00.4	Pin	1-1	E10171	
11.40175.00.4	Spring	1-1	E10175	
11.40178.04.4	Cog-wheel	5-1	E10178/4	
11.40179.07.4	Cog-wheel	2-1	E10179/7	
11.40211.00.4	Washer	5-1	E10211	
11.40212.00.4	Plinth, Facit 4060	6-1	E10212	
11.40215.00.4	Core	6-1	E10215	
11.40233.00.4	Arm	5-1	E10233	
11.40238.00.4	Core	2-2	E10238	
11.40240.00.4	Chad exhaust	3-1	E10240	
11.40244.00.4	Support	5-1	E10244	
11.40246.00 4	Plinth	2-2	E10246	

GENERAL

This spare parts list contains a complete set of spare parts for the Facit 5104 control unit. Sub-units and associated parts are grouped together in the part list.

Numbers of complete sub-units are shown in boxes 11.40817.00.4

The column headed "Old No." in the cross-indexed list contains designations for parts and dimension designations for screws, nuts, washers and taper pins. These latter are designated in accordance with the system used in the spare parts list for the Facit PE 1500 tape punch (UGB 650605).

These designations should be used only to identify the new ten-digit part numbers; they are not to be used when ordering spare parts.

It is important to include the model type designation on every spare part order. In order to facilitate and expedite the handling of spare part orders, they shall be made out in duplicate and preferably on special forms. These forms can be obtained free of charge from us on request. In conjunction with orders for spare parts covered by guarantee the defective parts shall be returned to the factory, giving the serial No. of the machine concerned.

Kindly address your orders for spare parts to:

Facit AB
Export Department
Fack

S-10380 STOCKHOLM
Sweden

SECTION III

TABLE OF CONTENTS

1. HOOD, CHASSIS AND CONTROL PANEL
2. POWER SUPPLY AND CONNECTORS
3. CIRCUIT BOARDS
3.1 BOARD NO. 1
3.2 BOARD NO. 2
3.3 BOARDS NO. 3 AND NO. 4
3.4 BOARD NO. 5
3.5 BOARD NO. 6
3.6 BOARD NO. 7
4. ACCESSORIES

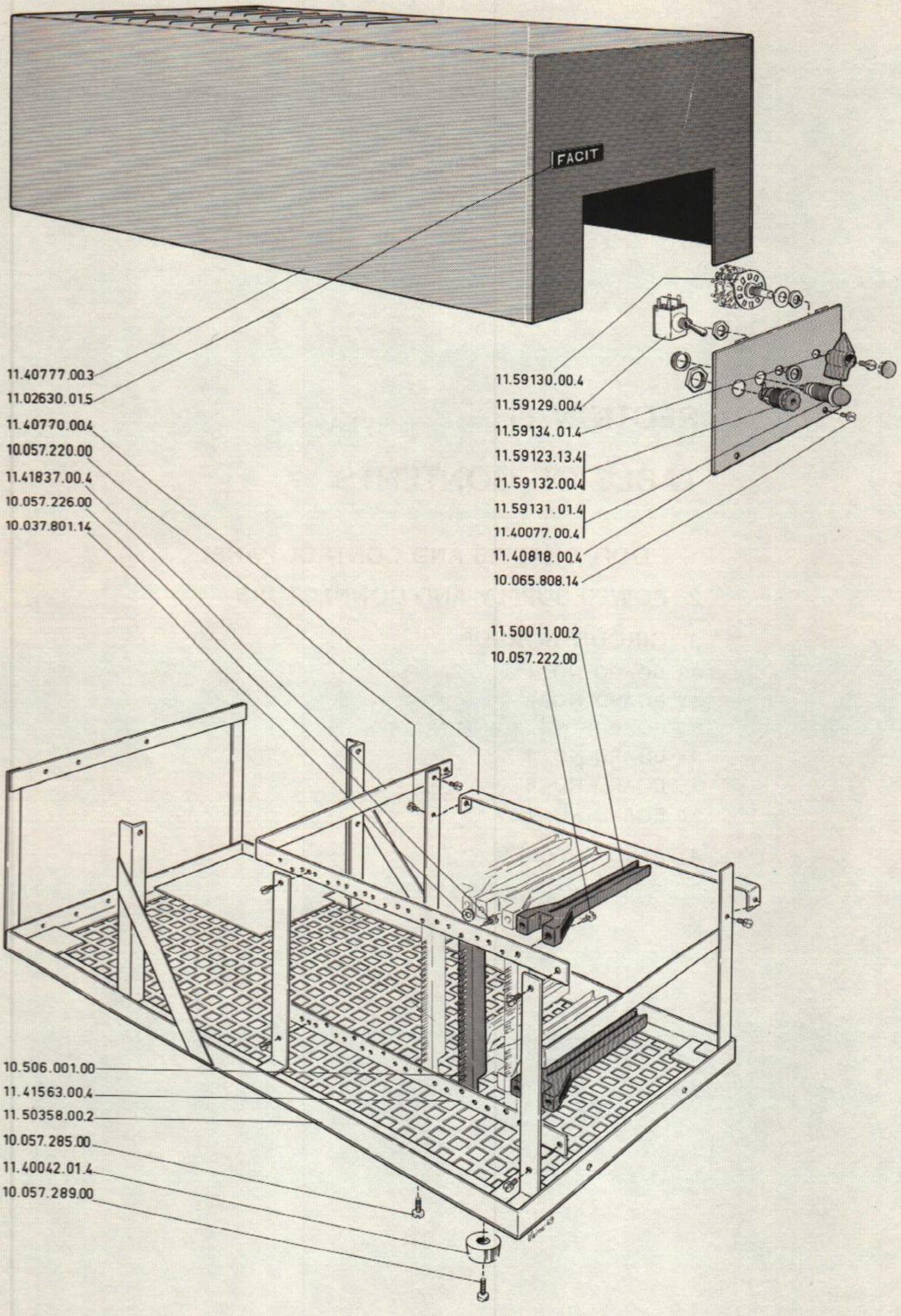
FACIT
11.40777.00.3
11.02630.01.5
11.40770.00.4
10.057.220.00
11.41837.00.4
10.057.226.00
10.037.801.14
11.59130.00.4
11.59129.00.4
11.59134.01.4
11.59123.13.4
11.59132.00.4
11.59131.01.4
11.40077.00.4
11.40818.00.4
10.065.808.14
11.50011.00.2
10.057.222.00
10.506.001.00
11.41563.00.4
11.50358.00.2
10.057.285.00
11.40042.01.4
10.057.289.00

1 **HOOD, CHASSIS AND CONTROL PANEL**

Part No.	Description	Qty
11.40777.00.3	Hood	1
11.02630.01.5	Facit sign plate	1
10.057.285.00	Screw	4
11.50358.00.2	Chassis	1
11.40042.01.4	Rubber foot	4
10.057.289.00	Screw	4
11.40770.00.4	Locking bar	1
11.41837.00.4	Support	1
11.41563.00.4	Support	1
10.057.220.00	Screw	7
11.50011.00.2	Board support	14
10.506.001.00	Board connector 22-poles	7
10.057.222.00	Screw	28
10.037.801.14	Washer	28
10.057.226.00	Screw	14
11.40817.00.4	Control panel complete	1
10.065.808.14	Screw	2
11.40818.00.4	Plate	1
11.59130.00.4	Wafer switch 4 ways 3 pole	1
11.59134.01.4	Knob	1
11.59129.00.4	Switch 2 pole	1
11.59132.00.4	Fuse holder Philips 88095	1
11.59123.19.4	Fuse 3A 5x20 mm	1
11.40077.00.4	Lamp holder Rafi 2214-A4 red	1
11.59131.01.4	Lamp BA9s 12 V 0.1A	1

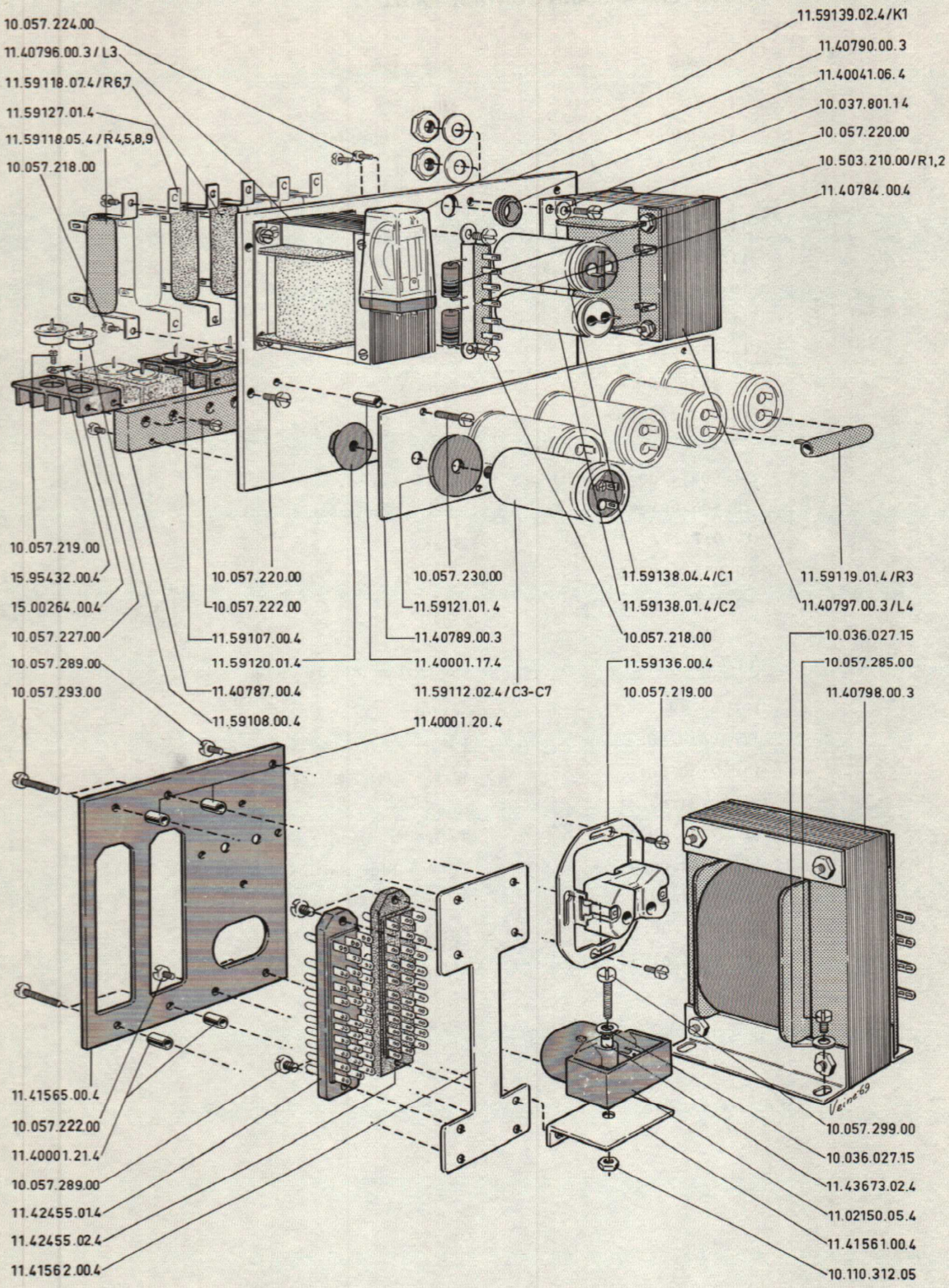
10.057.224.00
11.40796.00.3 / L3
11.59118.07.4 / R6,7
11.59127.01.4
11.59118.05.4 / R4,5,8,9
10.057.218.00
11.59139.02.4 / K1
11.40790.00.3
11.40041.06.4
10.037.801.14
10.057.220.00
10.503.210.00 / R1,2
11.40784.00.4
10.057.219.00
15.95432.00.4
15.00264.00.4
10.057.227.00
10.057.289.00
10.057.293.00
10.057.220.00
10.057.222.00
11.59107.00.4
11.59120.01.4
11.40787.00.4
11.59108.00.4
10.057.230.00
11.59121.01.4
11.40789.00.3
11.40001.17.4
11.59112.02.4 / C3-C7
11.40001.20.4
11.59138.04.4 / C1
11.59138.01.4 / C2
10.057.218.00
11.59136.00.4
10.057.219.00
11.59119.01.4 / R3
11.40797.00.3 / L4
10.036.027.15
10.057.285.00
11.40798.00.3
11.41565.00.4
10.057.222.00
11.40001.21.4
10.057.289.00
11.42455.01.4
11.42455.02.4
11.41562.00.4
10.057.299.00
10.036.027.15
11.43673.02.4
11.02150.05.4
11.41561.00.4
10.110.312.05

2

POWER SUPPLY AND CONNECTORS

Part No.	Description	Qty
11.40785.00.2	Power supply complete	1
10.057.220.00	Screw	4
11.40790.00.3	Plate	1
11.40041.06.4	Rubber grommet	1
11.40796.00.3/L3	Choke 0.035 H 0.38 ohms	1
11.40797.00.3/L4	Choke 0.050 H 0.38 ohms	1
10.057.220.00	Screw	8
10.037.801.14	Washer	8
11.40783.00.4	Resistor holder complete	1
10.057.218.00	Screw	2
11.40784.00.4	Plinth	1
10.503.210.00/R1,2	Resistor 10 ohms 2 W	2
11.59139.02.4/K1	Relay	1
10.057.224.00	Screw	2
11.59138.01.4/C2	Capapacitor 0.1 µF 630 V	1
11.59138.04.4/C1	Capacitor 1 µF 630 V	1
11.40788.00.3	Capacitor unit complete	1
10.057.230.00	Screw	4
11.40001.17.4	Distance tube	4
11.40789.00.3	Plate	1
11.59112.02.4/C3-C7	Capacitor 2500 µF 35 V	5
11.59121.01.4	Rubber washer	5
11.59120.01.4	Plastic nut	5
11.59119.01.4/R3	Resistor 7.5 ohms 10 W	1
11.59118.05.4/R4,5,8,9	Resistor 10 ohms 25 W	4
11.59118.07.4/R6,7	Resistor 25 ohms 25 W	2
11.59127.01.4	Holder	12
10.057.218.00	Screw	12

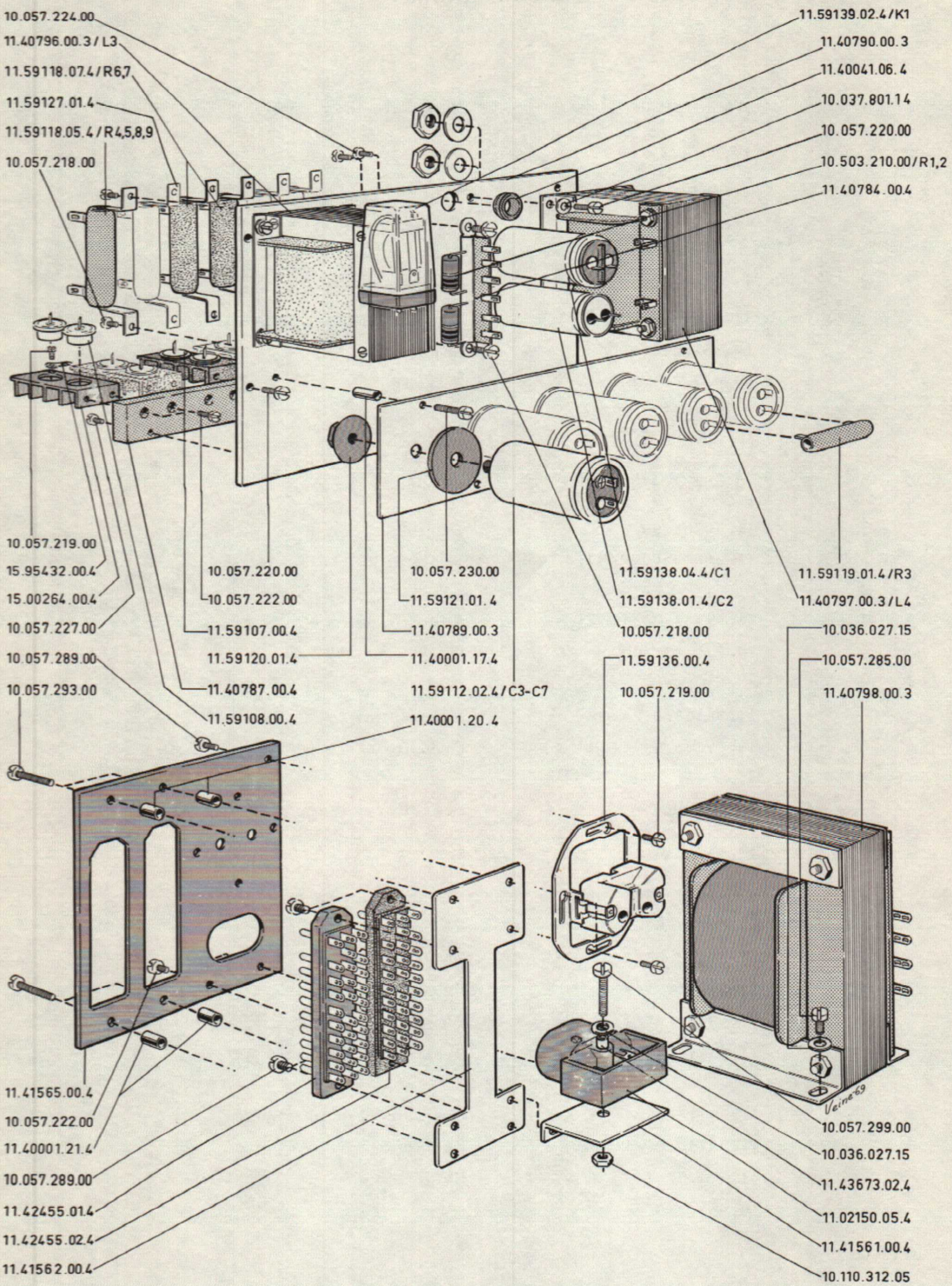
10.057.224.00
11.40796.00.3 / L3
11.59118.07.4 / R6,7
11.59127.01.4
11.59118.05.4 / R4,5,8,9
10.057.218.00
11.59139.02.4 / K1
11.40790.00.3
11.40041.06.4
10.037.801.14
10.057.220.00
10.503.210.00 / R1,2
11.40784.00.4
10.057.219.00
15.95432.00.4
15.00264.00.4
10.057.227.00
10.057.289.00
10.057.293.00
10.057.220.00
10.057.222.00
11.59107.00.4
11.59120.01.4
11.40787.00.4
11.59108.00.4
10.057.230.00
11.59121.01.4
11.40789.00.3
11.40001.17.4
11.59112.02.4 / C3-C7
11.40001.20.4
11.59138.04.4 / C1
11.59138.01.4 / C2
10.057.218.00
11.59136.00.4
10.057.219.00
11.59119.01.4 / R3
11.40797.00.3 / L4
10.036.027.15
10.057.285.00
11.40798.00.3
11.41565.00.4
10.057.222.00
11.40001.21.4
10.057.289.00
11.42455.01.4
11.42455.02.4
11.41562.00.4
10.057.299.00
10.036.027.15
11.43673.02.4
11.02150.05.4
11.41561.00.4
10.110.312.05

Part No.	Description	Qty
11.40786.00.4	Diode unit complete	1
10.057.227.00	Screw	2
11.40787.00.4	Holder	1
11.40794.00.4	Diode pair complete	3
10.057.222.00	Screw	6
11.59108.00.4	Diode BYX 21-200 R	6
11.40795.00.4	Diode pair complete	1
10.057.222.00	Screw	2
11.59107.00.4	Diode BYX 21-200	2
15.00264.00.4	Cooler	4
15.95432.00.4	Lug	4
10.057.219.00	Screw	4
11.40798.00.3	Transformer	1
10.057.285.00	Screw	4
10.036.027.15	Washer	4
11.41565.00.4	Panel	1
10.057.289.00	Screw	1
10.057.293.00	Screw	4
11.40001.20.4	Distance tube	2
11.40001.21.4	Distance tube	2
11.41561.00.4	Angle bracket	1
10.057.222.00	Screw	2
11.02150.05.4	Inlet socket	1
11.43673.02.4	Distance tube	1
10.057.299.00	Screw	1
10.036.027.15	Washer	1
10.110.312.05	Nut	1

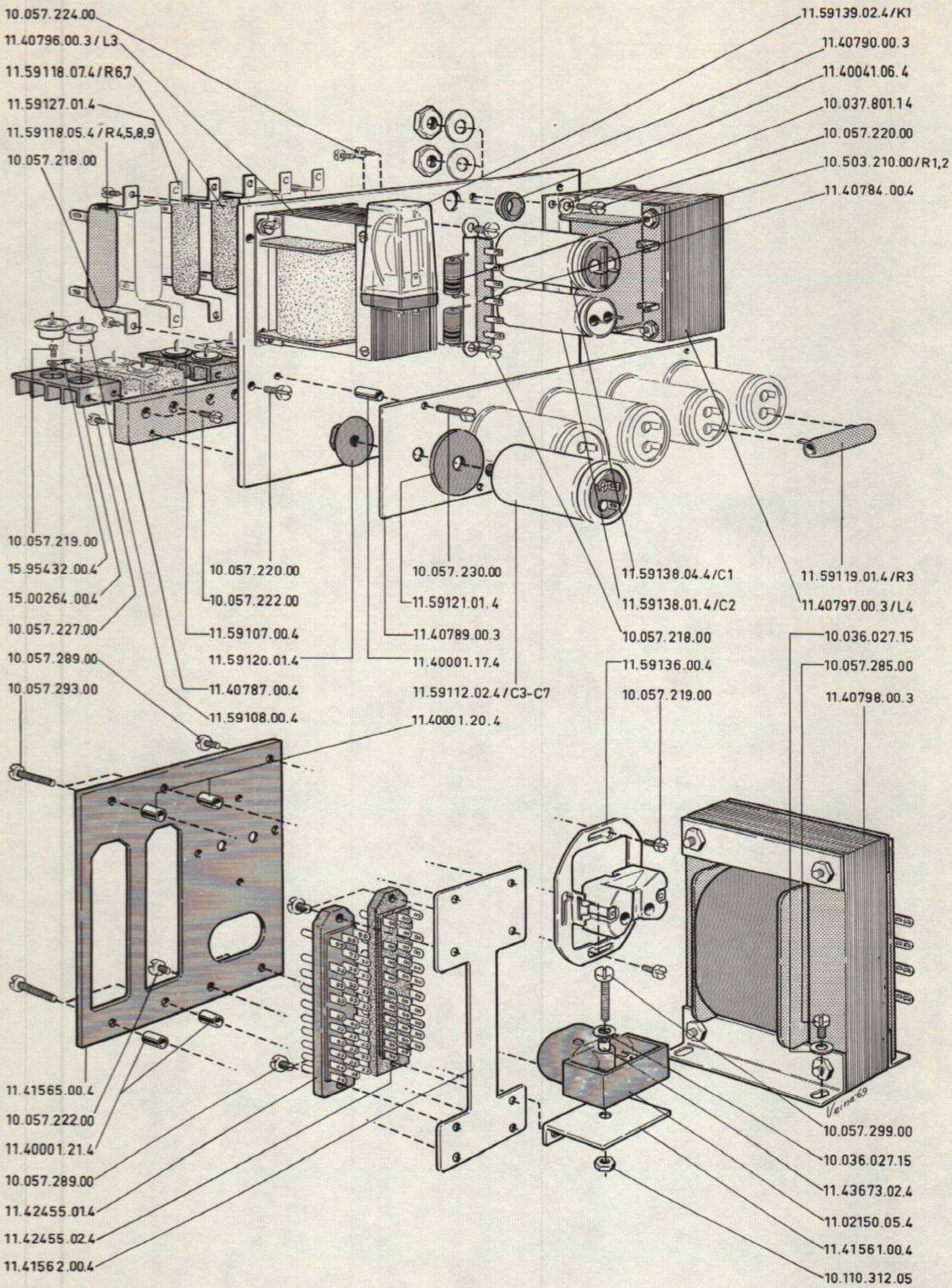
10.057.224.00
11.40796.00.3 / L3
11.59118.07.4 / R6,7
11.59127.01.4
11.59118.05.4 / R4,5,8,9
10.057.218.00
11.59139.02.4 / K1
11.40790.00.3
11.40041.06.4
10.037.801.14
10.057.220.00
10.503.210.00 / R1,2
11.40784.00.4
10.057.219.00
15.95432.00.4
15.00264.00.4
10.057.227.00
10.057.289.00
10.057.293.00
10.057.220.00
10.057.222.00
11.59107.00.4
11.59120.01.4
11.40787.00.4
11.59108.00.4
10.057.230.00
11.59121.01.4
11.40789.00.3
11.40001.17.4
11.59112.02.4 / C3-C7
11.40001.20.4
11.59138.04.4 / C1
11.59138.01.4 / C2
10.057.218.00
11.59136.00.4
10.057.219.00
11.59119.01.4 / R3
11.40797.00.3 / L4
10.036.027.15
10.057.285.00
11.40798.00.3
11.41565.00.4
10.057.222.00
11.40001.21.4
10.057.289.00
11.42455.01.4
11.42455.02.4
11.41562.00.4
10.057.299.00
10.036.027.15
11.43673.02.4
11.02150.05.4
11.41561.00.4
10.110.312.05

Part No.	Description	Qty
11.59136.00.4	Outlet	1
10.057.219.00	Screw	4
11.41562.00.4	Bracket	1
11.42455.01.4	Connector, Tuchel L2070	1
11.42455.02.4	Connector, Tuchel L2071	1
10.057.289.00	Screw	4

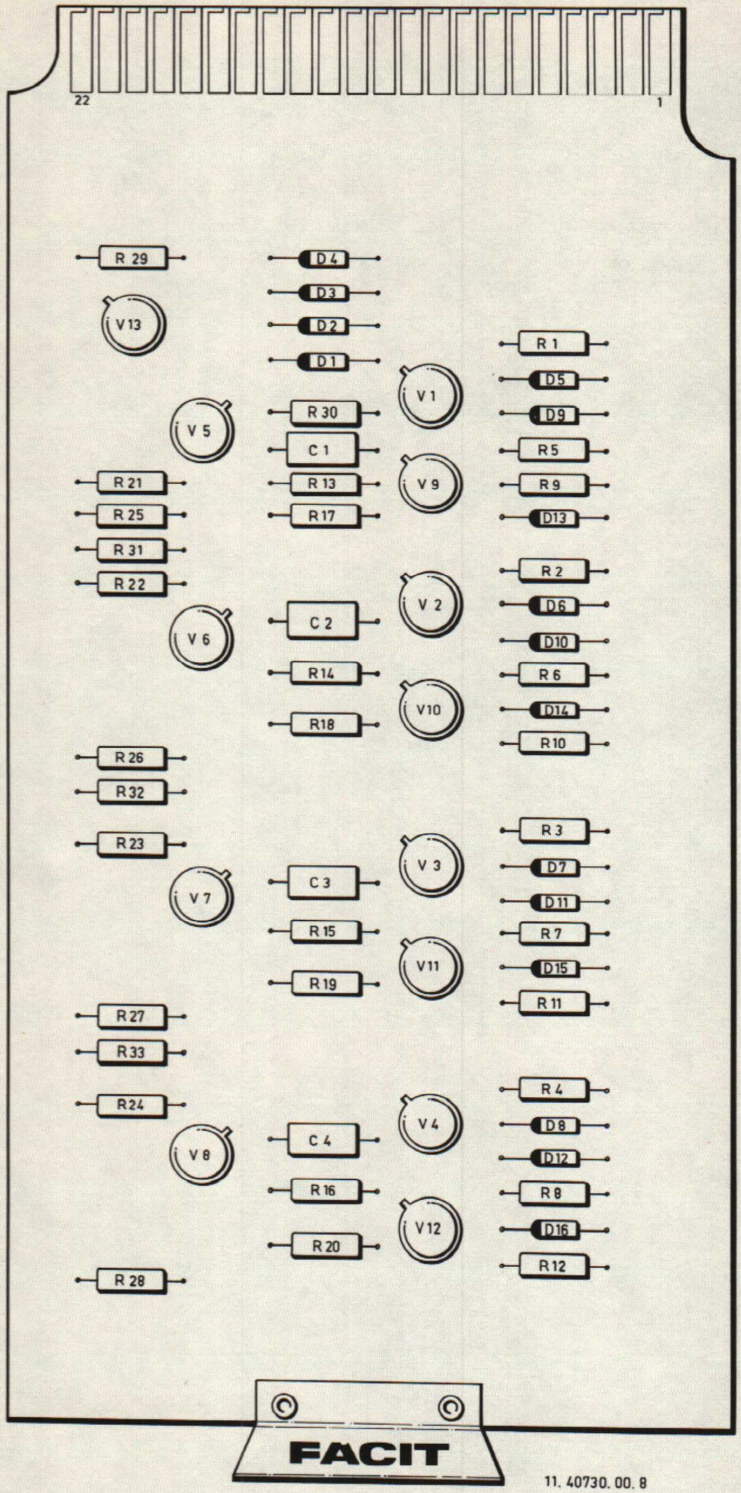
22
1
R 29
V 13
D 4
D 3
D 2
D 1
R 1
D 5
D 9
R 5
R 9
D 13
V 1
V 5
R 30
C 1
R 13
R 17
V 9
R 21
R 25
R 31
R 22
V 6
C 2
R 14
R 18
V 2
V10
R 2
D 6
D10
R 6
D14
R10
R 26
R 32
R 23
V 7
C 3
R 15
R 19
V 3
V11
R 3
D 7
D11
R 7
D15
R11
R 27
R 33
R 24
V 8
C 4
R 16
R 20
V 4
V12
R 4
D 8
D12
R 8
D16
R12
R 28
FACIT
11. 40730. 00. 8

3 **CIRCUIT BOARDS**

3.1 BOARD No. 1

Part No.	Description	Qty
11.40730.00.6	Board No. 1 complete	
11.59100.00.4/V1-13	Transistor 2N 1305, ASY 27	13
11.59104.00.4/D1-16	Diode AAZ 15	16
10.501.447.00/R1-4	Resistor 4.7k 1/2 W 10%	4
10.501.410.00/R5-12	Resistor 1k 1/2 W 10%	8
10.501.422.00/R13-20,29	Resistor 2.2k 1/2 W 10%	9
10.501.510.00/R21-28	Resistor 10k 1/2 W 10%	8
10.501.547.00/R30-33	Resistor 47k 1/2 W 10%	4
10.505.410.00/C1-4	Capacitor 1000 pF	4

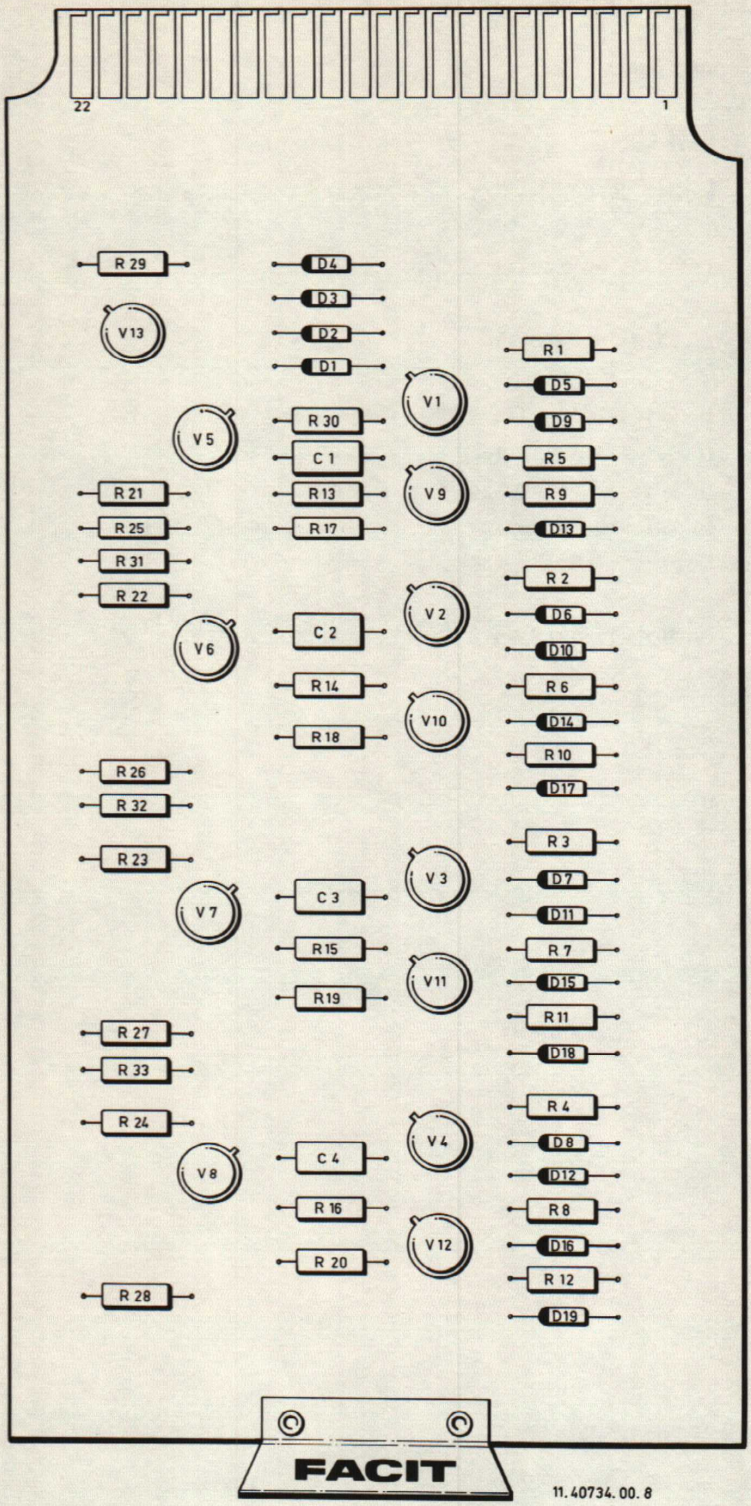
22
1
R 29
V 13
V 5
R 21
R 25
R 31
R 22
V 6
R 26
R 32
R 23
V 7
R 27
R 33
R 24
V 8
R 28
D 4
D 3
D 2
D 1
R 30
C 1
R 13
R 17
C 2
R 14
R 18
C 3
R 15
R 19
C 4
R 16
R 20
V 1
V 9
V 2
V 10
V 3
V 11
V 4
V 12
R 1
D 5
D 9
R 5
R 9
D 13
R 2
D 6
D 10
R 6
D 14
R 10
D 17
R 3
D 7
D 11
R 7
D 15
R 11
D 18
R 4
D 8
D 12
R 8
D 16
R 12
D 19
FACIT

11. 40734. 00. 8

3.2 BOARD No. 2

Part No.	Description	Qty
11.40734.00.6	Board No. 2 complete	
11.59100.00.4/V1-13	Transistor 2N 1305, ASY 27	13
11.59104.00.4/D1-19	Diode AAZ 15	19
10.501.447.00/R1-4	Resistor 4.7k 1/2 W 10%	4
10.501.410.00/R5-12	Resistor 1k 1/2 W 10%	8
10.501.422.00/R13-20,29	Resistor 2.2k 1/2 W 10%	9
10.501.510.00/R21-28	Resistor 10k 1/2 W 10%	8
10.501.547.00/R30-33	Resistor 47k 1/2 W 10%	4
10.505.410.00/C1-4	Capacitor 1000 pF	4

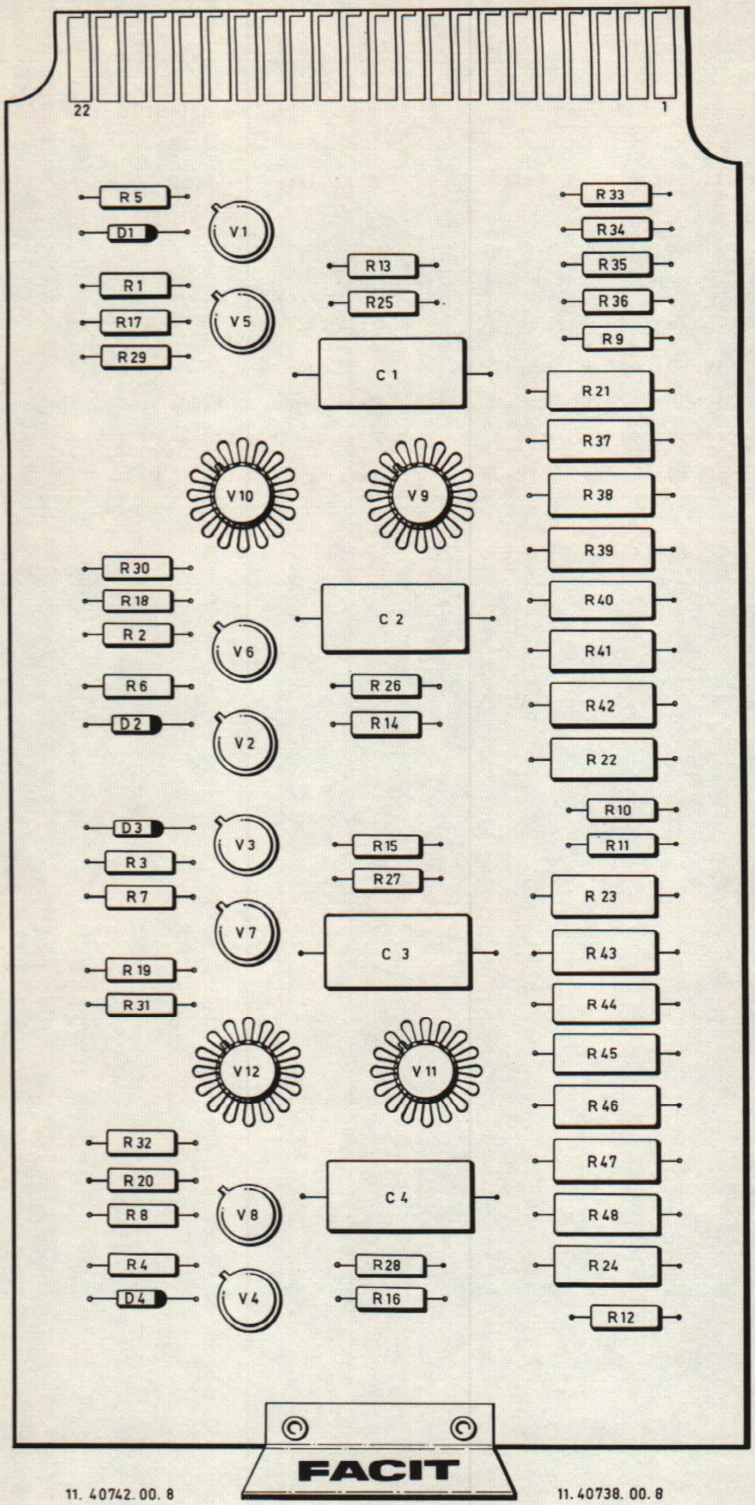
22
1
R 5
D1
V 1
R 1
R17
V 5
R 29
R 13
R25
C 1
R 33
R 34
R 35
R 36
R 9
R 21
R 37
R 38
R 39
R 40
R 41
R 42
R 22
V 10
V 9
R 30
R 18
R 2
C 2
V 6
R 6
D 2
V 2
R 26
R 14
R 10
R 11
R 23
R 43
R 44
R 45
R 46
R 47
R 48
R 24
R 12
D 3
R 3
R 7
V 3
V 7
R 15
R 27
C 3
R 19
R 31
V 12
V 11
R 32
R 20
R 8
V 8
C 4
R 4
D 4
V 4
R 28
R16
FACIT
11. 40742. 00. 8
11. 40738. 00. 8

3. 3 BOARD No. 3 AND No. 4

Part No.	Description	Qty
11.40738.00.6	Board No. 3 complete	
11.40742.00.6	Board No. 4 complete	
11.59100.00.4/V1-8	Transistor 2N 1305, ASY 27	8
11.59102.00.4/V9-12	Transistor ASY 80	4
11.59111.01.4/V9-12	Cooler	4
11.59104.00.4/D1-4	Diode AAZ 15	4
10.501.422.00/R1-4	Resistor 2.2k 1/2 W 10%	4
10.501.510.00/R5-8	Resistor 10k 1/2 W 10%	4
10.501.347.00/R9-12	Resistor 470 ohms 1/2 W 10%	4
10.501.410.00/R13-16	Resistor 1k 1/2 W 10%	4
10.501.447.00/R17-20	Resistor 4.7k 1/2 W 10%	4
10.502.315.00/R21-24	Resistor 150 ohms 1 W 10%	4
10.501.268.00/R25-28	Resistor 68 ohms 1/2 W 10%	4
10.501.368.00/R29-32	Resistor 680 ohms 1/2 W 10%	4
10.501.333.00/R33-36	Resistor 330 ohms 1/2 W 10%	4
10.502.247.00/R37-48	Resistor 47 ohms 1 W 10%	12
10.505.610.00/C1-4	Capacitor 0.1 µF	4

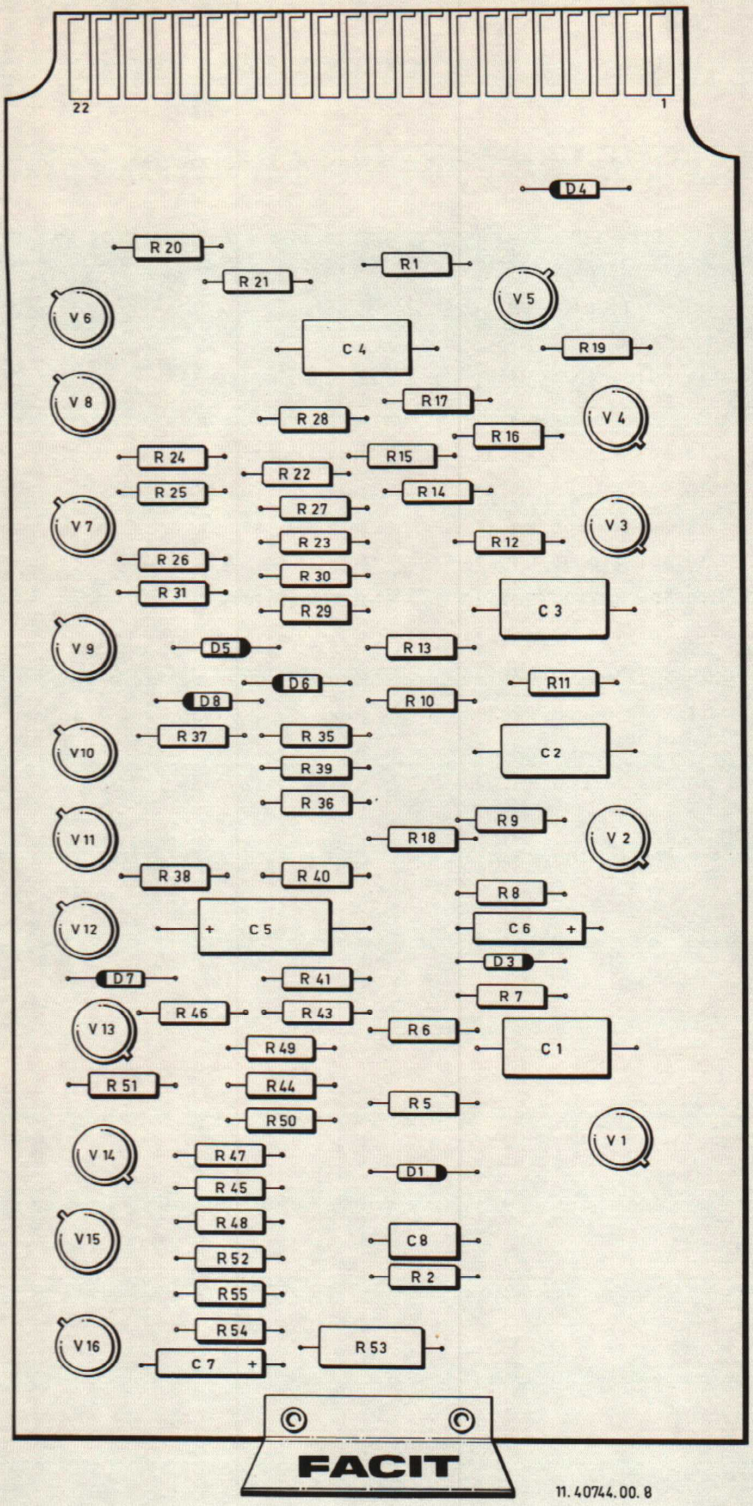
22
1
D4
R 20
R 21
R1
V 5
V 6
C 4
R 19
V 8
R 17
R 28
V 4
R 16
R 24
R15
R 22
R 25
R 14
R 27
V 7
V 3
R 23
R 12
R 26
R 30
R 31
C 3
R 29
V 9
D5
R 13
D6
R11
D8
R 10
V10
R 37
R 35
C 2
R 39
R 36
V 11
R 9
R 18
V 2
R 38
R 40
R 8
V 12
C 5
C 6
D 3
D 7
R 41
R 7
V 13
R 46
R 43
R 6
C 1
R 49
R 51
R 44
R 5
R 50
V 1
V 14
R 47
D1
R 45
R 48
C 8
V15
R 52
R 2
R 55
R 54
V 16
R 53
C 7
FACIT
11. 40744. 00. 8

3.4 BOARD No. 5

Part No.	Description	Qty
11.40744.00.6	Board No. 5 complete	
11.59100.00.4/V1-15	Transistor 2N 1305, ASY 27	15
11.59102.00.4/V16	Transistor ASY 80	1
11.59104.00.4/D1,D3-8	Diode AAZ 15	7
10.501.447.00/R1,17,19	Resistor 4.7k 1/2 W 10%	3
10.501.547.00/R2	Resistor 47k 1/2 W 10%	1
10.501.422.00/R5,11,12,20, 24,25,26,37,38,40,48	Resistor 2.2k 1/2 W 10%	11
10.501.510.00/R6,7,8,13,14, 27-29,39,40,49,50,52	Resistor 10k 1/2 W 10%	13
10.501.410.00/R9,10,16,22, 23,35,36,44,45,55	Resistor 1k 1/2 W 10%	10
10.501.347.00/R15,30	Resistor 470 ohms 1/2 W 10%	2
10.501.322.00/R18,51	Resistor 220 ohms 1/2 W 10%	2
10.501.522.00/R21	Resistor 22k 1/2 W 10%	1
10.501.310.00/R31,54	Resistor 100 ohms 1/2 W 10%	2
10.501.568.00/R41	Resistor 68k 1/2 W 10%	1
11.59125.22.4/R43	Resistor 1.8k 1/2 W 10%	1
10.502.322.00/R53	Resistor 220 ohms 1 W 10%	1
10.505.510.00/C1-4	Capacitor 0.01 µF	4
11.59116.08.4/C5	Capacitor 100 µF 20 V	1
11.59306.03.4/C6	Capacitor 10 µF 20 V	1
11.59306.02.4/C7	Capacitor 4.7 µF 35 V	1
10.505.410.00/C8	Capacitor 1000 pF	1

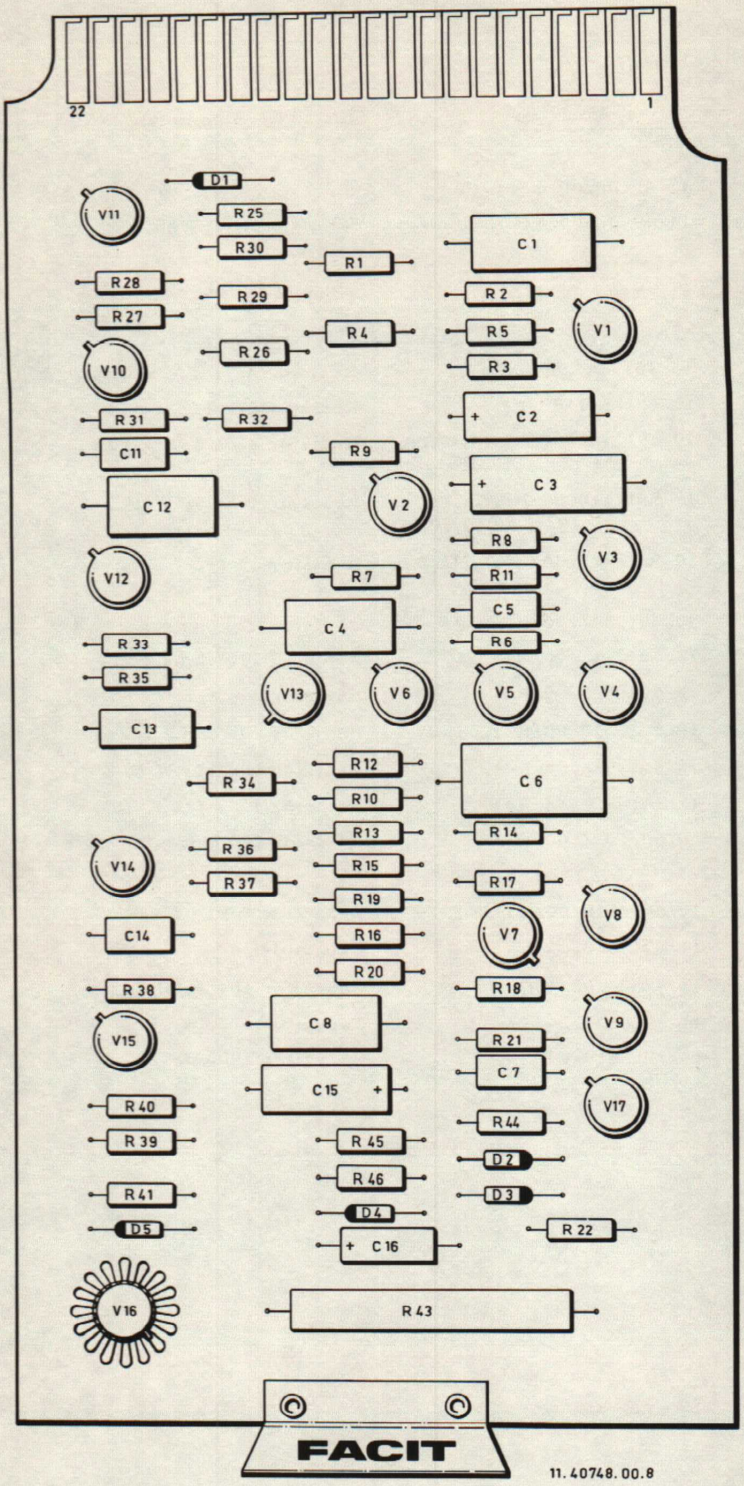
22
1
D1
V11
R 25
R 30
R1
C 1
R 28
R 29
R 2
R 27
R4
R 5
V1
R 26
R 3
V10
R 31
R 32
C 2
C11
R9
C 3
C 12
V 2
R8
V12
R7
V 3
R 11
C 4
C 5
R 33
R 6
R 35
V13
V 6
V 5
V 4
C 13
R 12
R 34
C 6
R 10
R 13
R 14
V14
R 36
R 15
R 37
R 17
R 19
V8
C14
V 7
R 16
R 20
R 38
R 18
C 8
V15
V9
R 21
C 7
C 15
R 40
V17
R 44
R 39
R 45
D 2
R 46
R 41
D 3
D4
D5
R 22
C 16
V16
R 43
FACIT
11.40748.00.8

3.5 BOARD No. 6

Part No.	Description	Qty
11.40748.00.6	Board No. 6 complete	
11.59100.00.4/V1-15,17	Transistor 2N 1305, ASY 27	16
11.59102.00.4/V16	Transistor ASY 80	1
11.59111.01.4/V16	Cooler	1
11.59104.00.4/D1-4	Diode AAZ 15	4
11.59105.00.4/D5	Diode U 12019/3	1
10.501.510.00/R1,9,12,13, 19,20,29,30,34,36, 39,45,46	Resistor 10k 1/2 W 10%	13
10.501.410.00/R2,5,7,17, 18,25,26,35,37,38, 40,44	Resistor 1k 1/2 W 10%	12
11.59125.26.4/R3	Resistor 8.2k 1/2 W 10%	1
10.501.322.00/R4	Resistor 220 ohms 1/2 W 10%	1
10.501.422.00/R6,8,14,27, 28,33	Resistor 2.2k 1/2 W 10%	6
10.501.615.00/R10,22,32	Resistor 150k 1/2 W 10%	3
10.501.522.00/R11,21,31	Resistor 22k 1/2 W 10%	3
10.501.347.00/R15,16	Resistor 470 ohms 1/2 W 10%	2
11.59125.16.4/R41	Resistor 820 ohms 1/2 W 10%	1
11.59110.11.4/R43	Resistor 68 ohms 10 W 5%	1
10.505.547.00/C1	Capacitor 0.047 µF	1
11.59307.03.4/C2,15	Capacitor 47 µF 20 V	2
11.59115.14.4/C3	Capacitor 100 µF 10 V	1
10.505.510.00/C4,8,12	Capacitor 0.01 µF	3
10.505.422.00/C5,7,11,14	Capacitor 2200 pF	4
10.505.610.00/C6	Capacitor 0.1 µF	1
10.505.447.00/C13	Capacitor 4700 pF	1
11.59306.03.4/C16	Capacitor 10 µF 20 V	1

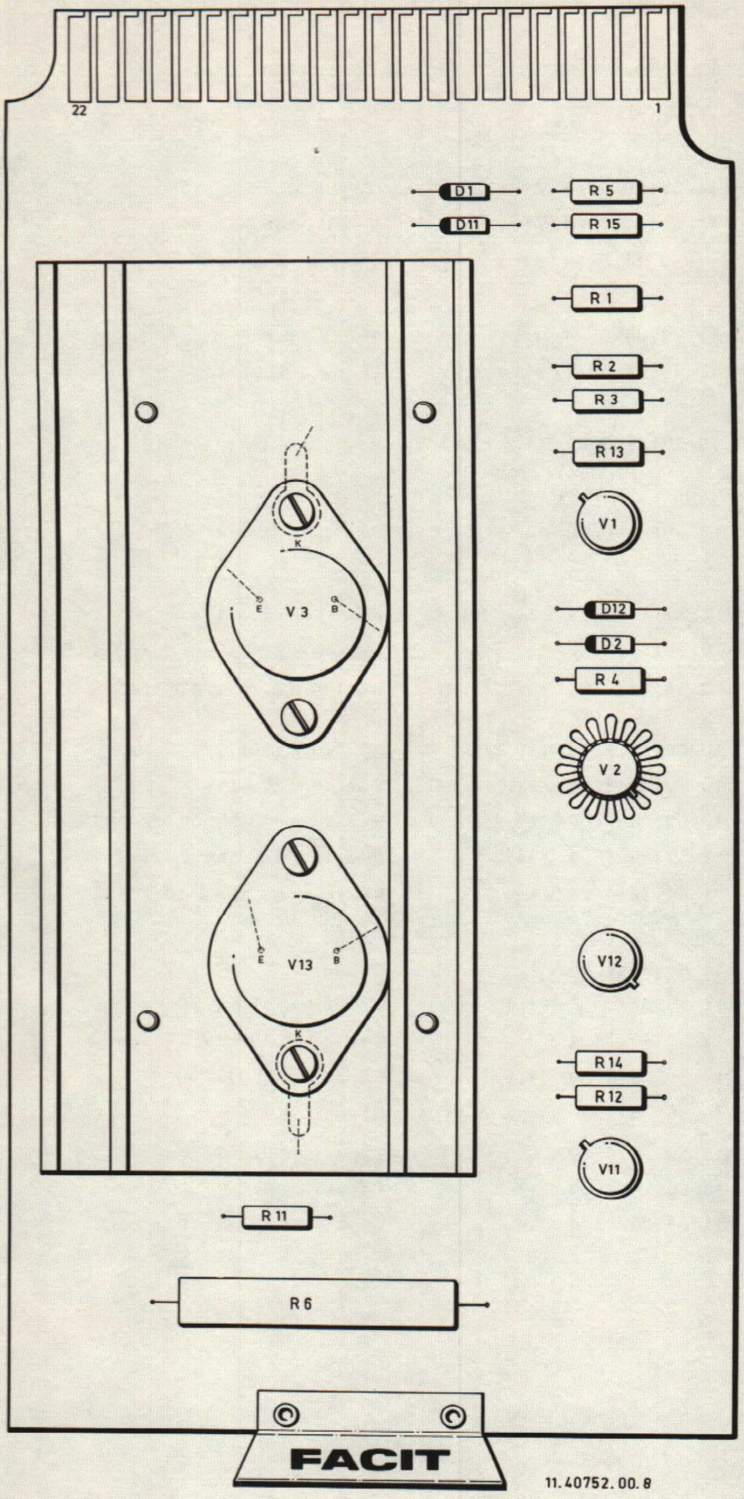
22
1
D1
D11
R 5
R 15
R 1
R 2
R 3
R 13
V1
K
E
B
V 3
D12
D2
R 4
V 2
V13
V12
R 14
R 12
V11
R 11
R 6
FACIT

11.40752.00.8

3.6 BOARD No. 7

Part No.	Description	Qty
11.40752.00.6	Board No. 7 complete	
11.59100.00.4/V1, 11	Transistor 2N 1305, ASY 27	2
11.59101.00.4/V2, 12	Transistor C 426, BFY 50	2
11.59111.01.4/V2	Cooler	1
11.59103.00.4/V3, 13	Transistor ASZ 15, TI 3030	2
11.40982.00.4/V3, 13	Mounting kit	2
15.01820.00.4/V3, 13	Cooler	1
10.057.220.00	Screw	4
11.59106.00.4/D1, 11	Diode 1N 4002	2
11.59105.00.4/D2, 12	Diode U 12019/3	2
10.501.347.00/R1, 4, 11, 14	Resistor 470 ohms 1/2 W 10%	4
10.501.447.00/R2, 12	Resistor 4.7k 1/2 W 10%	2
10.501.510.00/R3, 13	Resistor 10k 1/2 W 10%	2
10.501.247.00/R5, 15	Resistor 47 ohms 1/2 W 10%	2
11.59110.08.4/R6	Resistor 39 ohms 10 W	1

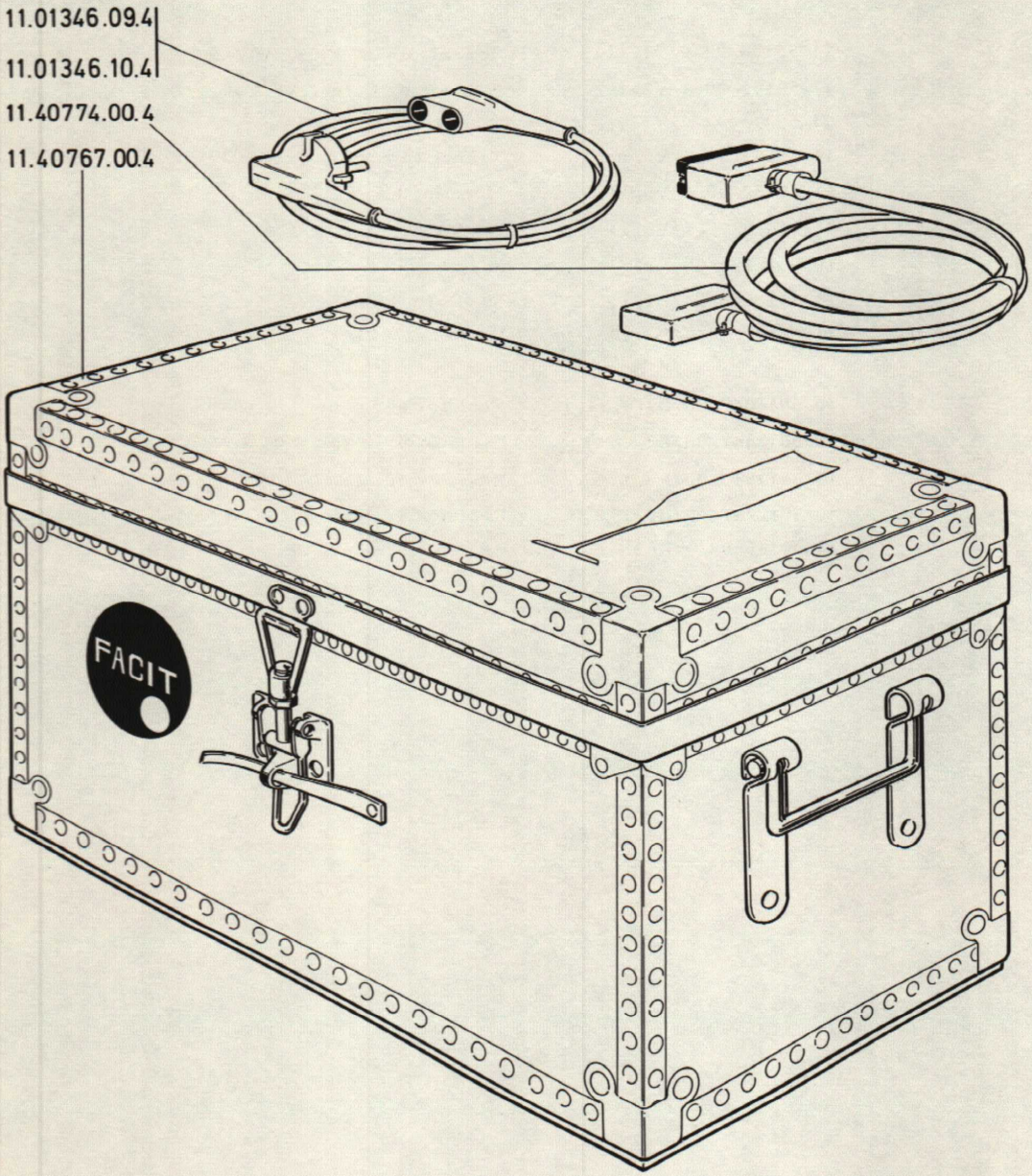
11.01346.09.4
11.01346.10.4
11.40774.00.4
11.40767.00.4
FACIT

Cross-indexed list

Part No.	Description	Section III Page No.	Old No.	Remarks
10.036.027.15	Washer	1-1, 2-2	A10242/7	
10.037.801.14	Washer	1-1, 2-1	BRB 3.2x8x1	
10.057.218.00	Screw	2-1	ECS 3x4	
10.057.219.00	Screw	2-2, -3	ECS 3x5	
10.057.220.00	Screw	1-1, 2-1, 3-6	ECS 3x6	
10.057.222.00	Screw	2-2	ECS 3x8	
10.057.224.00	Screw	2-1	ECS 3x10	
10.057.226.00	Screw	1-1	ECS 3x12	
10.057.227.00	Screw	2-2	ECS 3x14	
10.057.230.00	Screw	2-1	ECS 3x20	
10.057.285.00	Screw	2-2	ECS 4x6	
10.057.289.00	Screw	1-1, 2-2, -3	ECS 4x10	
10.057.293.00	Screw	2-2	ECX 4x16	
10.057.299.00	Screw	2-2	ECS 4x30	
10.065.808.14	Screw	1-1	LKCS 3x4	
10.110.312.05	Nut	2-2	LB6LM 4	
10.501.247.00	Resistor 47 ohms 1/2 W	3-6		
10.501.268.00	Resistor 68 ohms 1/2 W	3-3		
10.501.310.00	Resistor 100 ohms 1/2 W	3-4		
10.501.322.00	Resistor 220 ohms 1/2 W	3-4, -5		
10.501.333.00	Resistor 330 ohms 1/2 W	3-3		
10.501.347.00	Resistor 470 ohms 1/2 W	3-3~6		
10.501.368.00	Resistor 680 ohms 1/2 W	3-3		
10.501.410.00	Resistor 1k 1/2 W	3-1~5		
10.501.422.00	Resistor 2.2k 1/2 W	3-1~5		
10.501.447.00	Resistor 4.7k 1/2 W	3-1~4, -6		
10.501.510.00	Resistor 10k 1/2 W	3-1~6		
10.501.522.00	Resistor 22k 1/2 W	3-4, -5		
10.501.547.00	Resistor 47k 1/2 W	3-1, -2, -4		
10.501.568.00	Resistor 68k 1/2 W	3-4		
10.501.615.00	Resistor 150k 1/2 W	3-5		
10.502.247.00	Resistor 47 ohms 1 W	3-3		
10.502.315.00	Resistor 150 ohms 1 W	3-3		
10.502.322.00	Resistor 220 ohms 1 W	3-4		
10.503.210.00	Resistor 10 ohms 2 W	2-1		

Cross-indexed list

Part No.	Description	Section III Page No.	Old No.	Remarks
10.505.410.00	Capacitor 1000 pF	3-1, -2, -4		
10.505.422.00	Capacitor 2200 pF	3-5		
10.505.447.00	Capacitor 4700 pF	3-5		
10.505.510.00	Capacitor 0.01 µF	3-4, -5		
10.505.547.00	Capacitor 0.047 µF	3-5		
10.505.610.00	Capacitor 0.1 µF	3-3, -5		
10.506.001.00	Board connector 22-poles	1-1		
11.01346.09.4	Mains cable Eur. 2-pin plug	4-1	B1346/9	
11.01346.10.4	Mains cable Amer. 3-pin plug	4-1	B1346/10	
11.02150.05.4	Inlet socket	2-2	B2150/5	
11.02630.01.5	Facit sign plate	1-1	A2630/1	
11.40001.17.4	Distance tube	2-1		
11.40001.20.4	Distance tube	2-2	E10001/20	
11.40001.21.4	Distance tube	2-2	E10001/21	
11.40041.06.4	Rubber grommet	2-1	E10041/6	
11.40042.01.4	Rubber foot	1-1	E10042/1	
11.40077.01.4	Lamp holder	1-1	E95159/1	
11.40730.00.6	Board No. 1 complete	3-1		
11.40734.00.6	Board No. 2 complete	3-2		
11.40738.00.6	Board No. 3 complete	3-3		
11.40742.00.6	Board No. 4 complete	3-3		
11.40744.00.6	Board No. 5 complete	3-4		
11.40748.00.6	Board No. 6 complete	3-5		
11.40752.00.6	Board No. 7 complete	3-6		
11.40767.00.4	Protective case	4-1		
11.40770.00.4	Locking bar	1-1		
11.40774.00.4	Signal cable	4-1	E15517	
11.40777.00.3	Hood	1-1		
11.40783.00.4	Resistor holder complete	2-1		
11.40784.00.4	Plinth	2-1		
11.40785.00.2	Power supply complete	2-1		
11.40786.00.4	Diode unit complete	2-2		
11.40787.00.4	Holder	2-2		
11.40788.00.3	Capacitor unit complete	2-1		
11.40789.00.3	Plate	2-1		
11.40790.00.3	Plate	2-1		

Cross-indexed list

Part No.	Description	Section III Page No.	Old No.	Remarks
11.40794.00.4	Diode pair complete	2-2		
11.40795.00.4	Diode pair complete	2-2		
11.40796.00.3	Choke 0.035 H 0.38 ohms	2-1		
11.40797.00.3	Choke 0.050 H 0.38 ohms	2-1		
11.40798.00.3	Transformer	2-2		
11.40817.00.4	Plate complete	1-1	E15759	
11.40818.00.4	Plate	1-1	E11564	
11.40982.00.4	Mounting kit	3-6		
11.41561.00.4	Angle bracket	2-2	E11561	
11.41562.00.4	Bracket	2-3	E11562	
11.41563.00.4	Support	1-1	E11563	
11.41565.00.4	Panel	2-2	E11565	
11.41837.00.4	Support	1-1	E11837	
11.42455.01.4	Connector, Tuchel L2070	2-3	E12455	
11.42455.02.4	Connector, Tuchel L2071	2-3	E12455/2	
11.43673.02.4	Distance tube	2-2	E13673/2	
11.50011.00.2	Board support	1-1	C10011	
11.50358.00.2	Chassis	1-1	C10358	
11.59100.00.4	Transistor 2N 1305, ASY 27	3-1~6		
11.59101.00.4	Transistor C 426, BFY 50	3-6		
11.59102.00.4	Transistor ASY 80	3-3~5		
11.59103.00.4	Transistor ASZ 15, TI 3030	3-6		
11.59104.00.4	Diode AAZ 15	3-1~5		
11.59105.00.4	Diode U 12019/3	3-5, -6		
11.59106.00.4	Diode 1N 4002	3-6		
11.59107.00.4	Diode BYX 21-200	2-2		
11.59108.00.4	Diode BYX 21-200R	2-2		
11.59110.08.4	Resistor 39 ohms 10 W	3-6		
11.59110.11.4	Resistor 68 ohms 10 W 5 %	3-5		
11.59111.01.4	Cooler	3-3, -5, -6		
11.59112.02.4	Capacitor 2500 µF 35 V	2-1		
11.59115.14.4	Capacitor 100 µF 10 V	3-5		
11.59116.08.4	Capacitor 100 µF 20 V	3-4		
11.59118.05.4	Resistor 10 ohms 25 W	2-1	E95078/5	
11.59118.07.4	Resistor 25 ohms 25 W	2-1	E95078/8	
11.59119.01.4	Resistor 7.5 ohms 10 W	2-1	E95082	
11.59120.01.4	Plastic nut	2-1		

Cross-indexed list

Part No.	Description	Section III Page No.	Old No.	Remarks
11.59121.01.4	Rubber washer	2-1		
11.59123.19.4	Fuse 3A 5x20 mm	1-1		
11.59125.16.4	Resistor 820 ohms 1/2 W	3-5		
11.59125.22.4	Resistor 1.8k 1/2 W	3-4		
11.59125.26.4	Resistor 8.2k 1/2 W	3-5		
11.59127.01.4	Holder	2-1	E95084	
11.59129.00.4	Switch 2 pole	1-1	E12485	
11.59130.00.4	Wafer switch 4 ways 3 pole	1-1	E12375	
11.59131.01.4	Lamp BA9s 12 V 0.1 A	1-1	E95157	
11.59132.00.4	Fuse holder Philips 88095	1-1	E12452	
11.59134.01.4	Knob	1-1	E95142	
11.59136.00.4	Outlet	2-3	E95161	
11.59138.01.4	Capacitor 0.1 µF 630 V	2-1		
11.59138.04.4	Capacitor 1 µF 630 V	2-1		
11.59139.02.4	Relay	2-1		
11.59306.02.4	Capacitor 4.7 µF 35 V	3-4		
11.59306.03.4	Capacitor 10 µF 20 V	3-4, -5		
11.59307.03.4	Capacitor 47 µF 20 V	3-5		
15.00264.00.4	Cooler	2-2		
15.01820.00.4	Cooler	3-6		
15.95432.00.4	Lug	2-2		

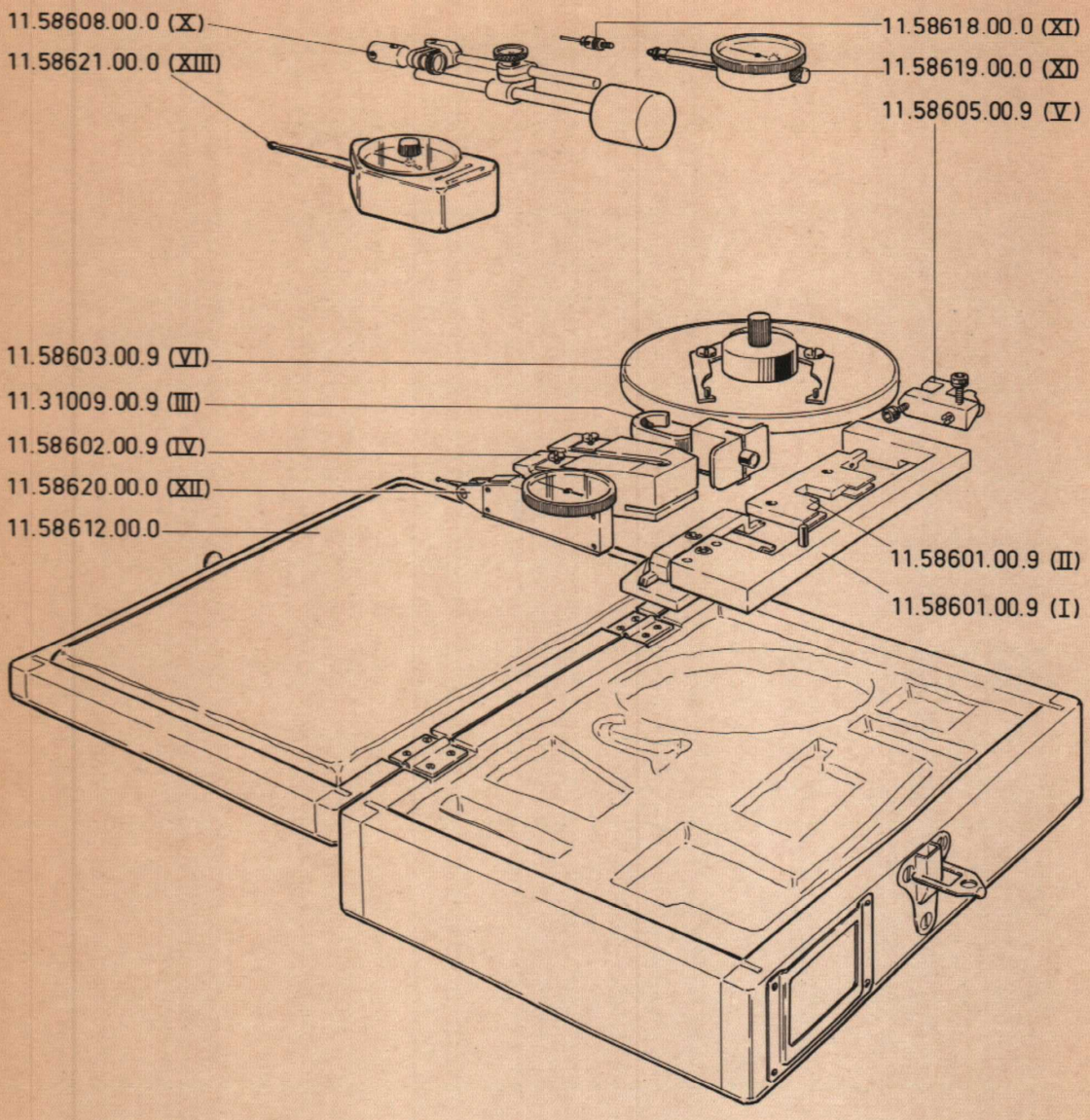
11.58608.00.0 (X)
11.58621.00.0 (XIII)
11.58618.00.0 (XI)
11.58619.00.0 (XI)
11.58605.00.9 (V)
11.58603.00.9 (VI)
11.31009.00.9 (III)
11.58602.00.9 (IV)
11.58620.00.0 (XII)
11.58612.00.0
11.58601.00.9 (II)
11.58601.00.9 (I)

SPECIAL TOOLS, INSTRUMENTS AND HAND TOOLS

Part No.	Description	Qty
11.58633.00.0	Tool set, complete (Includes all special tools, instruments and hand tools for Facit 4060)	
11. 58608.00.0 (X)	Magnetic holder	
11.58621.00.0 (XIII)	Dial-type spring tension gauge 0-350 g	
11.58603.00.9 (VI)	Protractor wheel	
11.31009.00.9 (III)	Main shaft tool	
11.58602.00.9 (IV)	Holder for DTI	
11.58620.00.0 (XII)	Dial tilt indicator (DTI)	
11.58612.00.0	Protective case	
11.58618.00.0 (XI)	Stylus for dial gauge	
11.58619.00.0 (XI)	Dial gauge	
11.58605.00.9 (V)	Holder for DTI	
11.58601.00.9 (II)	Adjusting tool	
11.58601.00.9 (I)	Adjusting tool	

11.58609.00.0 (XV)

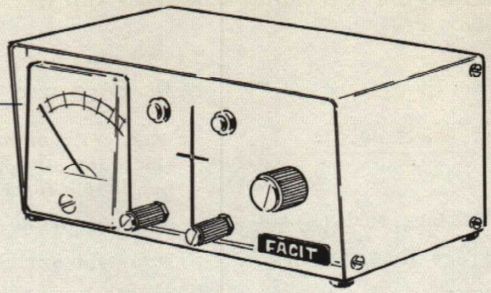

11.58604.00.9 (XVI)

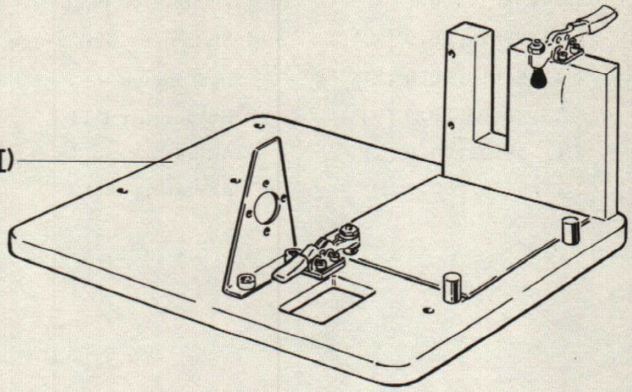

11.58614.00.0

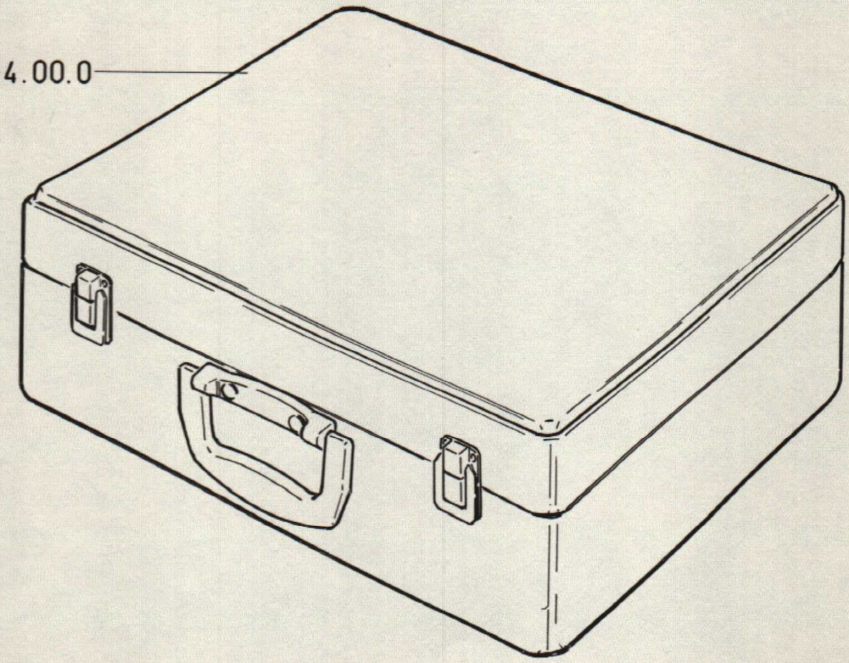

Part No.	Description	Qty
11.58609.00.0 (XV)	Test box	
11.58604.00.9 (XVI)	Test rig.	
11.58614.00.0	Test box/rig case	